EN

PIUSI

# FUEL CATALOGUE

MADE IN ITALY

# FUEL PRODUCT RANGE


| PRODUCT RANGE | PRODUCT CATEGORY | | | PRODUCT | PAG |
|---|---|---|---|---|---|
| FUEL MANAGEMENT SYSTEM | FUEL MANAGEMENT SYSTEM | | | OVERVIEW | 8 |
| | B.SMART | SOFTWARE | B.SMART | B.SMART | 10 |
| | | | | ADD-ONS | 12 |
| | | CONTROL | IdentiTank | IDENTITANK | 14 |
| | | DISPENSER | | CUBE B.SMART | 16 |
| | | | | CUBE B.SMART PROEIGHT | 18 |
| | | | | SELF SERVICE B.SMART | 20 |
| | | CONTROL BOX | | MCBOX B.SMART | 22 |
| | | PIUSI SUPREME | | PIUSI 3000 SUPREME B.SMART | 24 |
| | SSM 2.0 | SOFTWARE | SSM 2.0 | SSM2.0 | 26 |
| | | | SSM 2.0 | DATA TRANSFER SSM 2.0 | 28 |
| | | DISPENSER | | CUBE MC 2.0 | 30 |
| | | | | SELF SERVICE MC 2.0 | 32 |
| | | | | SELF SERVICE FM 2.0 | 34 |
| | | CONTROL BOX | | MCBOX 2.0 | 36 |
| | AGILIS SELFSERVICE MANAGEMENT | SOFTWARE | AGILIS | SSM AGILIS | 38 |
| | | | AGILIS | DATA TRANSFER AGILIS | 40 |
| | | DISPENSER | | CUBE MC | 42 |
| | | | | SELF SERVICE MC | 44 |
| | | CONTROL BOX | | MCBOX | 46 |
| DISPENSERS | MEHCANICAL DISPENSER | | | CUBE | 52 |
| | | | | SELF SERVICE K44 | 54 |
| KITS | ATEX KITS | | | EX50 DRUM | 60 |
| | | | | PANTHER EX 56 DRUM | 62 |
| | | | | EX100 DRUM | 64 |
| | | | | EX140 DRUM | 66 |
| | | | | ST PANTHER EX 56 | 68 |
| | DRUM | | | DRUM | 70 |
| | | | | PICO | 72 |
| | MOBILE | | | BATTERY KIT | 74 |
| | | | | PITSTOP | 76 |
| | | | | PIUSIBOX | 78 |
| | | | | CARRY | 80 |
| | ST | | | ST | 82 |
| | | | | ST WITH METER | 84 |
| | | | | ST WITH METER AND FILTER | 86 |
| | | | | ST BOX | 88 |
| | | | | ST 200 AC | 90 |
| | | | | ST 200 DC | 92 |
| PUMPS | ATEX AC PUMPS | | | EX100 | 98 |
| | | | | EX140 | 100 |
| | | | | PANTHER EX 56 | 102 |
| | ATEX DC PUMPS | | | EX50 / EX75 DC | 104 |
| | | | | EXGO! | 106 |
| | AC PUMPS | | | PANTHER AC | 108 |
| | | | | VISCOMAT VANE | 110 |
| | | | | E80 / E120 | 112 |
| | | | | E140 | 114 |
| | | | | E300 | 116 |


*All Pictures shown are for illustration purpose only. Actual product may vary due to product enhancement.*

PIUSI


| PRODUCT RANGE | PRODUCT CATEGORY | PRODUCT | PAG |
|---|---|---|---|
| PUMPS | NEW! OVERVIEW PIUSI SUPREME | PIUSI SUPREME OVERVIEW | 118 |
| | DC PUMPS | PIUSI 3000 SUPREME | 120 |
| | | BP3000 | 122 |
| | | PANTHER DC | 124 |
| | | BIPUMP | 126 |
| | HAND PUMPS | PIUSI HAND PUMP | 128 |
| | | HAND PUMPS | 130 |
| METERS | ATEX ELECTRONIC METERS | K24 ATEX | 136 |
| | ATEXMECHANICAL METERS | K33 ATEX | 138 |
| | | K150 ATEX | 140 |
| | ELECTRONIC METERS | K24 | 142 |
| | | K600/3 | 144 |
| | | K600 B/3 | 146 |
| | | K600/4 | 148 |
| | | K700 PULSER | 150 |
| | | K900 | 152 |
| | | REMOTE DISPLAY | 154 |
| | MECHANICAL METERS | K90 | 156 |
| | | K33 / K44 | 158 |
| | | K150 | 160 |
| | | K700 | 162 |
| NOZZLES | ATEX AUTOMATIC NOZZLES | A60 / A140 ATEX | 168 |
| | AUTOMATIC NOZZLES | A60 / A80 / A120 / A140 | 170 |
| | | A280 | 172 |
| | MANUAL NOZZLES | SELF 2000 / SELF 3000 | 174 |
| FILTRATION | FILTERING SYSTEM | FILTROLL | 180 |
| | FILTERS | GASOLINE FILTER | 182 |
| | | WATER CAPTOR | 184 |
| | | CLEAR CAPTOR | 186 |
| | | FUEL & BIOFUEL | 188 |
| | | FOOT VALVE | 190 |
| TANK MONITORING | TANK LEVEL INDICATORS | OCIO | 194 |
| | | OCIO 2.0 | 196 |
| HOSE REEL | OPEN HOSE REEL | DIESEL HOSE REEL | 200 |
| ACCESSORIES | ACCESS CONTROL | ACCESS 85 | 208 |
| | ACCESSORIES | CONNECTORS | 210 |
| | | COUPLING&FITTINGS | 212 |
| | | FLANGED CONNECTIONS | 214 |
| | | HOSE&SWIVEL | 216 |
| MERCHANDISE | MERCHANDISE | | 222 |


FUEL

# THE HISTORY OF "KNOW-HOW"

## ABOUT US

**PIUSI was established in 1953 in Suzzara, in the province of Mantua (Italy)**. For more than 60 years, **PIUSI has been the major player in the world's leading markets with its full range of products for transferring, refilling and measuring lubricants, fuels and liquids such as gasoline, diesel, Diesel Exhaust Fluid (DEF), oil, water and grease**.
Some of PIUSI's main products include pumps, flow meters, nozzles, dispensers, hose reels, liquid level gauges, software and complete kits used by operators in agriculture, the automotive industry, workshops and garages, fleet management and transport by road and by sea. PIUSI products have many different uses such as monitoring and transferring fuel at trucking companies, refueling of agricultural vehicles, transferring fuels in construction and mining for heavy duty vehicles. The products are intuitive and easy to use; are suitable to be installed in a variety of contexts; are all made entirely in Italy; and all products express the innovation, quality, professionalism and R&D that have always distinguished PIUSI. Its headquarters are in Suzzara (Mantova - 150 km from Milan and Venice). The company currently employs more than 250 employees between sales, administration, R&D, production and logistics. PIUSI products are sold in more than 120 countries around the world thanks to a large network of distributors and the US branch based in Fort Lauderdale, FL, serving the North and South American markets.

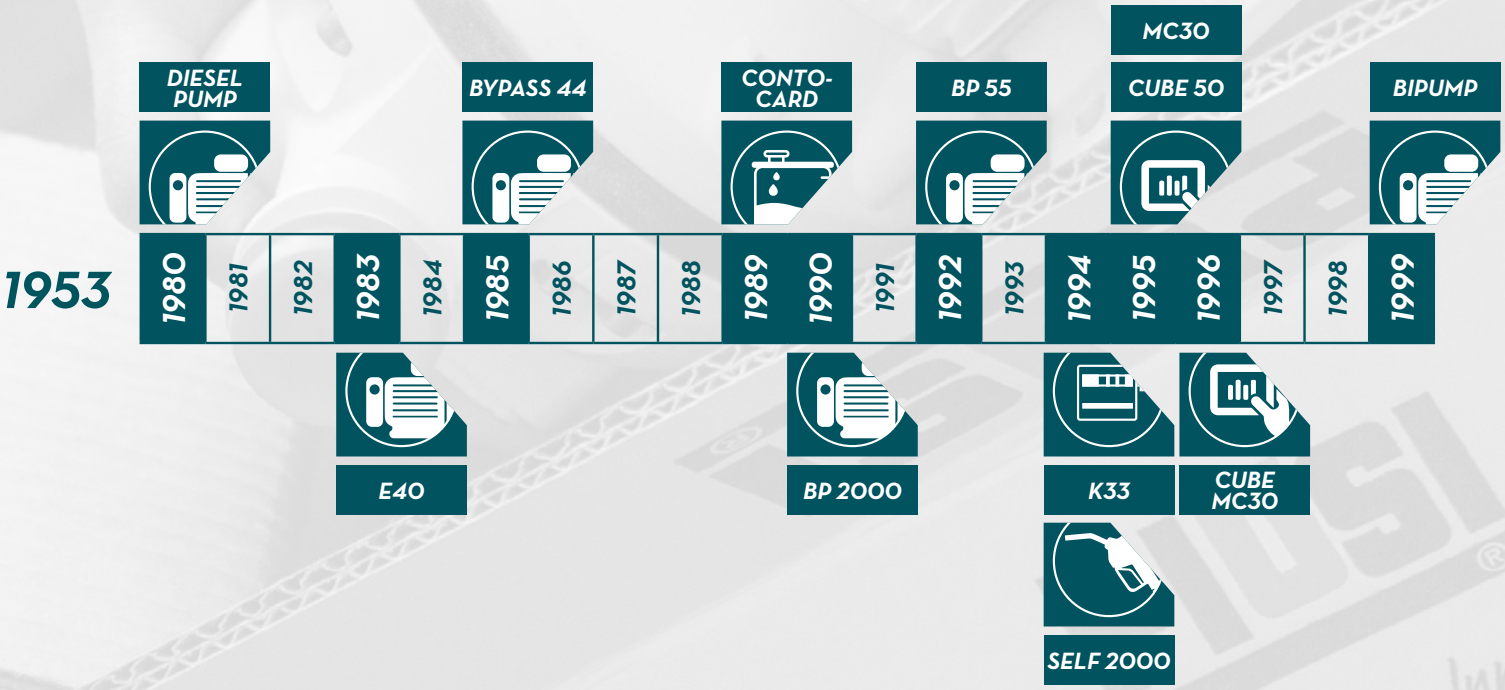

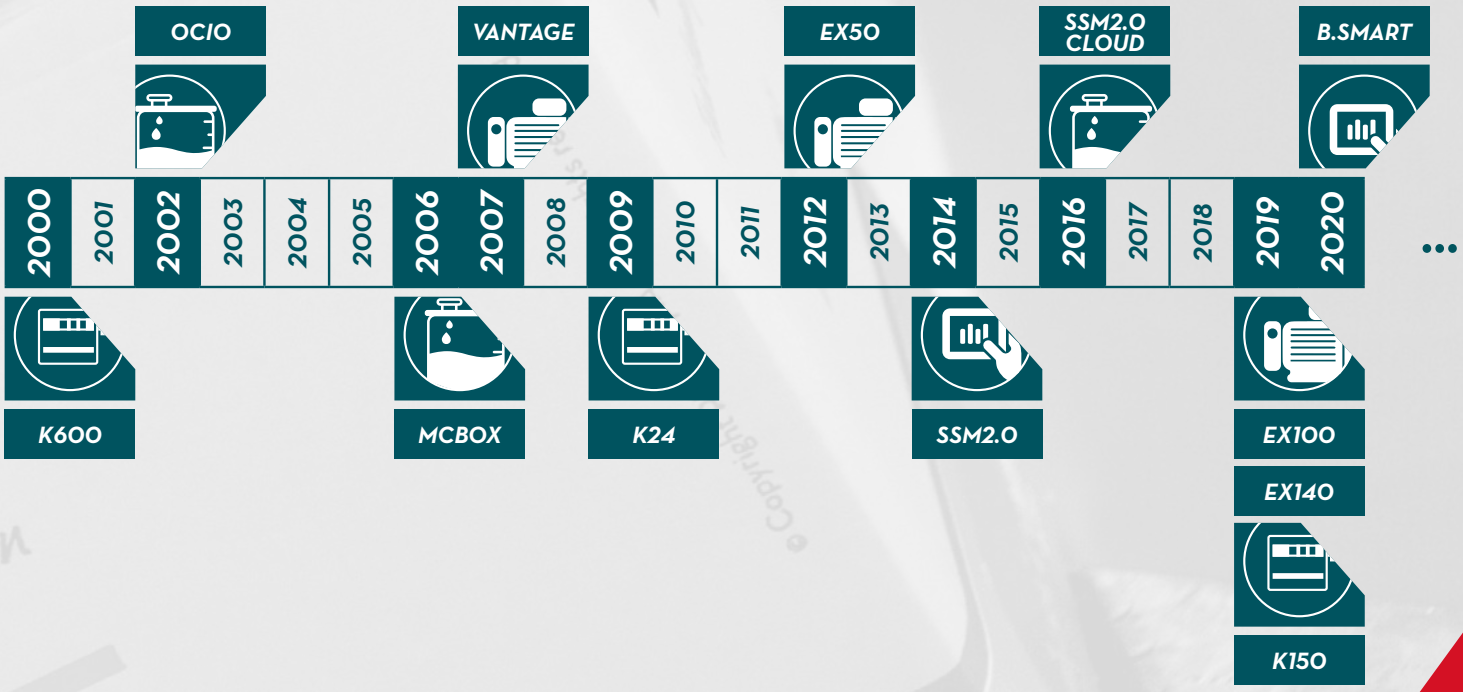
OCIO
VANTAGE
EX50
SSM2.0 CLOUD
B.SMART
2000
2001
2002
2003
2004
2005
2006
2007
2008
2009
2010
2011
2012
2013
2014
2015
2016
2017
2018
2019
2020
...
K600
MCBOX
K24
SSM2.0
EX100
EX140
K150

# FUEL MANAGEMENT SYSTEMS

# OVERVIEW

## FEATURES:

### ACCURATE DATA

*• REAL AND ACCURATE CONSUMPTIONS' DATA ON EACH REFUELLING OPERATION MANAGED AUTOMATICALLY BY THE SYSTEM;*

*• OVERVIEW ON CONSUMPTIONS' TREND AND AVAILABLE RESIDUAL FUEL;*

### REDUCED COSTS

*• CAREFUL AND MEASURED CONSUMPTION OF FUEL ALLOWS TO SAVE UP TO 10% OF FUEL EVERY YEAR*

### NO ABUSE

*• A FUEL MANAGEMENT SYSTEM ALLOWS YOU TO TRACK WHO IS MAKING THE PROCEDURE, ON WHICH VEHICLE ALSO INDICATING THE DISPENSER USED IN ORDER TO CONTAIN ABUSES.*

**Fuel Management Systems** (FMS) are technologically-advanced equipment that allow to **measure, control and manage the consumptions of fuel** (or other fluids) **of fleets or other Company vehicles** (such as for example the earth moving machines within the construction industry).

The **consumption** of fuel, diesel and petrol **is an important** part of the running **costs** of a fleet.

**How much fuel have you wasted in the past few months?**
**How much fuel does each vehicle or driver consume?**
**What was the trend of consumptions?**

To have a **clear and precise overview** on the situation, **you need a FMS**.

A system linked to your dispensers and stations for fuel transferring that follow and trace all the refuelling operations also indicating who is the operator and the vehicle which is refuelled; all in real time.

**PIUSI has developed 3 different FMS software** suitable for all different requirements: **B.SMART, SSM 2.0 and SELF SERVICE MANAGEMENT AGILIS.**

# Why choose a PIUSI FMS?

With **70 years of history**, PIUSI can supply not only all the technological and IT aspects of the software, but also – integrated – a wide range of dispensers suitable for all needs.

By choosing PIUSI, **you will have** – from a single supplier – **not only the Software, but also the dispensing Hardware** directly **from the same Company.**

| | | AGILIS SELFSERVICE MANAGEMENT | SSM 2.0 SELF SERVICE MANAGEMENT | B.SMART |
|---|---|---|---|---|
| | | **Dispensing control ideal for:** company that wants to monitor the quantity delivered. | **Consumption control ideal for:** a company that wants to monitor and manage the quantities supplied, manage consumption and supply of fuels. | **Dispensing control ideal for:** company that wants to monitor and manage the quantities delivered in the cloud without territorial limitations, with smart technologies. |
| **GENERAL** | PLATFORM | PC Software | PC Software | Cloud Software |
| | MULTISITE | - | with PW mobile | YES |
| | MAX USERS | 250/Dispenser | up to 1000 | Unlimited |
| | MAX DISPENSERS | 16 | up to 20 | Unlimited |
| | USER LOGIN | iButton/Pincode | iButton/Pincode | Mobile App |
| **LIMIT SETTINGS** | REMOTE USER/DISPENSER DEACTIVATION | - | YES | YES |
| | USER DAY/WEEKLY LIMITS | - | YES | with Fuel Economy Add-on |
| | VEHICLE LIMITS | - | YES | with Fuel Economy Add-on |
| **MANAGEMENT:** • VEHICLES • SUPPLIERS • CONSUMPTIONS | REGISTRATION NUMBER | Manual entry | iButton | Mobile App |
| | USER VEHICLE ASSIGNMENT | - | YES | YES |
| | ODOMETER | YES | YES | YES |
| | EXTERNAL TRANSACTIONS | - | YES | with Fuel Economy Add-on |
| | FUEL CONSUMPTION MANAGEMENT | - | YES | with Fuel Economy Add-on |
| | ADBLUE CONSUMPTION MANAGEMENT | - | YES | with Fuel Economy Add-on |
| | FLUID SUPPLIERS MANAGEMENT | - | YES | with Tank Watchdog Add-on |
| **TANK LEVEL MANAGEMENT** | TANK LOW LEVEL PUMP CUT-OFF | YES | YES | YES |
| | REMOTE TANK LEVEL MANAGEMENT | - | YES | with Tank Watchdog Add-on |
| | MAX NO. OCIO | - | up to 20 | Unlimited - with Tank Watchdog Add-on |
| **TANK ALARM** | SOFTWARE ALARMS | YES | YES | YES |
| | HARDWARE ALARMS (W/OCIO) | - | YES | YES |
| **REPORT** | TRANSACTION REPORT | YES | YES | YES |
| | TANK LEVEL REPORT | - | YES | with Tank Watchdog Add-on |
| | FUEL PRICE TREND REPORT | - | YES | with Tank Watchdog Add-on |

IBUTTON: IN CASE OF EMERGENCY IF/OR SMARTPHONE IS ABSENT OR IT DOESN'T WORK

# B.SMART

## FEATURES

- SIMPLE, INTUITIVE, SUITABLE FOR EVERYONE
- UNLIMITED TO FIT ALL NEED
- MONO OR MULTI-SITE
- SOFTWARE ALWAYS INCLUDED WITH THE DISPENSER
- BLUETOOTH
- CLOUD-BASED
- NO SOFTWARE INSTALLATION
- NO FEE
- ANALYSIS, CONTROL AND MANAGEMENT IN ONE CLICK

B.SMART is the Fuel Management System (FMS) by PIUSI designed and engineered for fleets of all sizes: small, medium, large, mono or multi-site. Innovative, simple and smart - the name carries its meaning – PIUSI B.SMART combines the quality and efficiency of PIUSI dispensers, with a Cloud-based software (APP for drivers and a web APP for fleet managers) driven by Bluetooth technology; that means no Wi-Fi or LAN network are required. Thus, it is possible to use B.SMART wherever; also in the more distant areas.
A FMS all in one: the fleet manager has just to choose the necessary dispensers; the software is always included in the "package" (no rental ore recurring fee will be required).

### PERFORMANCE

| | |
|---|---|
| DATA **AVAILABLE** ALWAYS<br>TRANSACTIONS | NO **SOFTWARE** ON THE PC<br>CLOUD |
| **NO FEE**<br>UTILIZATION | **BLUETOOTH** NO WI-FI OR LAN<br>CONNECTION |

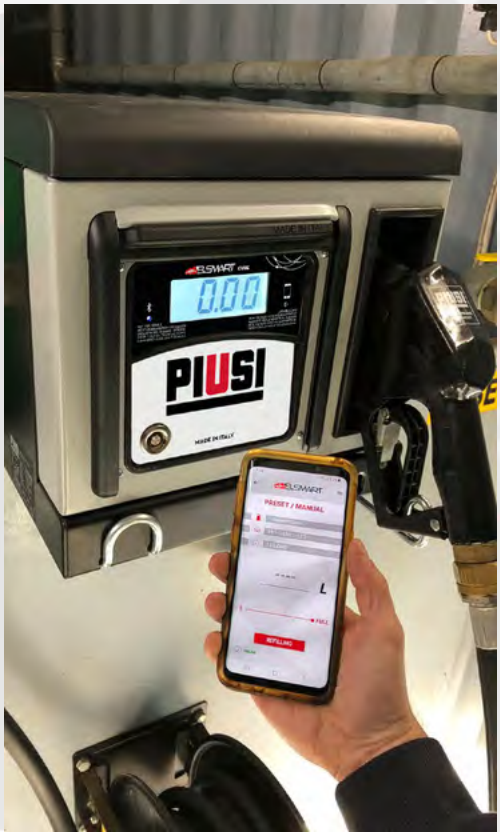


## B.SMART

B.SMART is flexible and expandable: the same system easily fits to all requirements. It is only necessary to add the add-on needed to keep up with the evolution of the fleet.

### B.SMART API AVAILABLE

*CONNECT YOUR ERP TO B.SMART WITH THE INTEGRATED API INTERFACE.*

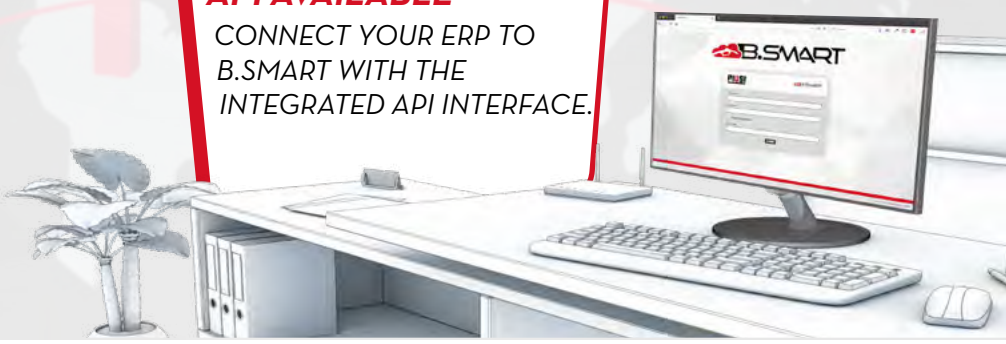

## APP

Dedicated to drivers, the APP for drivers just needs a smart device with Bluetooth to work properly: once the APP is open, the smartphone or tablet immediately connects to the dispenser to start the refueling operation.

## HARDWARE

PIUSI B.SMART runs only with the dedicated range of dispensing devices: quality guaranteed by PIUSI; the highest technical performances and reliability, all form a unique supplier. Real time communication between the dispenser and the PC.

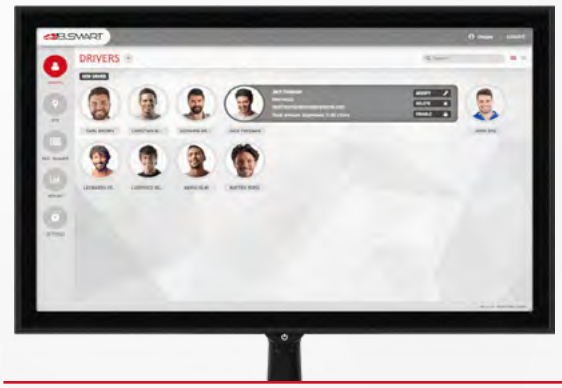


## CLOUD

The core of B.SMART fuel management software is a Cloud-based service that tracks every refuelling operation and keeps every device synchronized.

## WEB APP

Dedicated to fleet manager. No software installation: just log in and start immediately to monitor, manage and control consumptions of the fleet.

# ADD-ONS

## ADD-ON

Once the ADD-ON is chosen, PIUSI will send an activation code with all related instructions.

| DRIVER ADD-ON | |
|---|---|
| CODE | DESCRIPTION |
| F22500000 | DRIVER ACCESS ADD-ON B.SMART (X10) |
| F00770D20 | DRIVER ACCESS ADD-ON B.SMART (X50) |

## TANK WATCHDOG

B.SMART Tank Watchdog is the perfect add on for a complete and updated control of the stock. It allows you to:

- monitor the tank level (add fluid loads and unloads and adjustments);
- set level alarms;
- manage suppliers;
- follow inventory price values and trends;
- access and download reports from anywhere

| TANK WATCHDOG ADD-ON | |
|---|---|
| CODE | DESCRIPTION |
| F00770L00 | B.SMART TANK WATCHDOG ADD-ON - 1 YEAR |
| F00770L20 | B.SMART TANK WATCHDOG ADD-ON - ONE TIME FEE |

### Tank levels

Adding the level indicator OCIO, the system allows you to monitor the fluid level in your tanks in real time and gives alarms in case of malfunction or low levels. A perfect add-on for a complete and updated control of the stock. You can connect also any 420 mA o 0-10 V fluid gauge or run the system without any gauge thanks to the “virtual tank” option:

- set level alarms and get notifications on the tank level;
- possibility to configure high level or low level alarms;
- stop the pump according to the level of the fluid;
- send an automatic e-mail to notify when you reach the level alarm set.

### Fluid price and values

Thank to the level indicator OCIO you can have at your fingertips the fluid inventory value & quantity: you can define the refuelling price and verify the current inventory value.

- manage suppliers of the fluids to keep track of the date, price and quantity bought;
- get real time data of the value of your inventory;
- follow fluids price trends;
- access and download reports from any internet connected device thanks to the software cloud.

## FUEL ECONOMY

Enhance your system and become even more smart with the Fuel Economy ADD-ON for B.SMART!
Thanks to this new module, you can now completely manage and increase the profitability of your fleet:

- manage consumptions, cross-checking vehicles and drivers;
- manage drivers' and vehicles' limits;
- add, check and manage the on-road refuellings.

## Fleet management & limits

Thanks to this new add-on, you can:

- add to the B.SMART WEB APP system all the vehicles of your fleet;
- group all the vehicles according to a specific and personalized setting;
- add to the WEB APP the images of your vehicles and drivers for a quickest and easy identification;
- set drivers and vehicles limits based on quantities or time frames

**FUEL ECONOMY ADD-ON**

| CODE | DESCRIPTION |
|---|---|
| F00770F00 | B.SMART FUEL ECONOMY ADD-ON 1 YEAR |
| F00770F20 | B.SMART FUEL ECONOMY ADD-ON ONE TIME FEE |
| F17299Q00 | B.SMART FUEL ECONOMY 45 QR CODES |

## Consumptions report

Thanks to this new add-on, you can have detailed reports of:

- fuel/AdBlue® dispenses;
- vehicles' consumptions, spotting deviations vs standard;
- drivers' consumption on vehicles, tracking the driving behaviour of the operator;
- spot drivers' high fuel consumption;
- add on-road transactions highlighting also fuel/AdBlue® costs and the service station used in order to have a complete overview on the trend/activities of both drivers and vehicles.

## MAPLY

The add-on is specifically designed for companies working in construction, mining, excavation, drilling, landscaping or agriculture that want to have all the information at-a-glance including GPS location of fuel dispensing. With Maply Add-on it is possible:

- reduce fuel waste
- increase company profitability
- monitor & control fuel dispensing

## Geolocation

- Geolocate fuel transactions and display them on a map;
- "report on map" gives an overview of fuel dispensing. Clicking on a fuel transaction you get all the relevant data (quantity, date, time, vehicle refuelled, etc.)

## Manage fluid handover from fixed to mobile tanks

- Automatically manage portable tank loads;
- fuel transfer information will be managed inside the B.Smart reporting system, increasing information effectiveness.

## 3rd parties vehicles refuelling

- Track fuel transactions on third-party vehicles;
- possibility to send e-mail notifications and add operator's notes.

**MAPLY ADD-ON**

| CODE | DESCRIPTION |
|---|---|
| F00770M00 | B.SMART MAPLY ADD-ON • 1 YEAR |
| F00770M20 | B.SMART MAPLY ADD-ON • ONE TIME FEE |

## AVAILABLE KITS ADD-ON

**KIT ADD-ON**

| CODE | DESCRIPTION |
|---|---|
| F00770K00 | KIT TANK WATCHDOG + FUEL ECONOMY 1 YEAR |
| F00770K20 | KIT TANK WATCHDOG + FUEL ECONOMY ONE TIME FEE |
| F00770K40 | KIT TANK WATCHDOG + FEM + MAPLY 1 YEAR |
| F00770K60 | KIT TANK WATCHDOG + FEM + MAPLY ONE TIME FEE |

# IDENTITANK

B.SMART

## FEATURES

- NOZZLE WITH RFID READER
- WIRELESS CONNECTION
- DURABLE
- B.SMART INTEGRATION
- RFID TAGS FOR TANKS

Discover IdentiTank, the new hardware system by Piusi, designed to revolutionize fuel management. IdentiTank is the latest Piusi system that verifies the pairing between the nozzle and the vehicle, offering you maximum control over the fuel dispensing point. Thanks to its wireless and RFID technology, IdentiTank ensures security, savings, and efficient resource management.

- **Safe and Waste-Free Refueling:** IdentiTank allows fuel dispensing only when the RFID reader on the nozzle is near the tag attached to the tank.
- **Automatic stop:** If the reader loses the tag signal during refueling, the flow stops, preventing waste and unauthorized use.
- **Instant authentication:** The system immediately recognizes the tank, allowing only approved refueling.
- **24/7 protection:** Every refueling session is recorded and traceable within the B.SMART system.

### PERFORMANCE

B.SMART

B.SMART SOFTWARE

NOZZLE WITH RFID READER

### PACKAGING

| CODE | WEIGHT | | PACKAGING | | | N. BOXES / EUROPALLET | |
|---|---|---|---|---|---|---|---|
| | KG | LBS | MM | INCH | PCS/BOX | ✈ | 🚢 |
| F00598300 | 25,7 | 56,6 | 380X380X480 | 15X15X18,9 | 1 | - | - |
| F00599800 | 8,74 | 19,2 | 480X370X270 | 18,8X14,5X10,6 | 1 | - | - |
| F00599810 | 5,2 | 11,4 | 480X370X270 | 18,8X14,5X10,6 | 1 | - | - |
| **ACCESSORIES** | | | | | | | |
| F00790400 | 0,05 | 0,11 | 140X110X70 | 5,5X4,3X2,7 | 10 | - | - |
| F00790410 | 0,25 | 0,55 | 120X160X130 | 4,7X6,2X5,1 | 50 | - | - |
| F00790300 | - | - | - | - | - | - | - |

ANY BIODIESEL | AIR | ANTIFREEZE | AdBlue® | BIODIESEL | DIESEL | FOOD | GASOLINE | GREASE | KEROSENE | OIL | WATER | WINDSCREEN

## OPERATING DIAGRAM

# IdentiTank

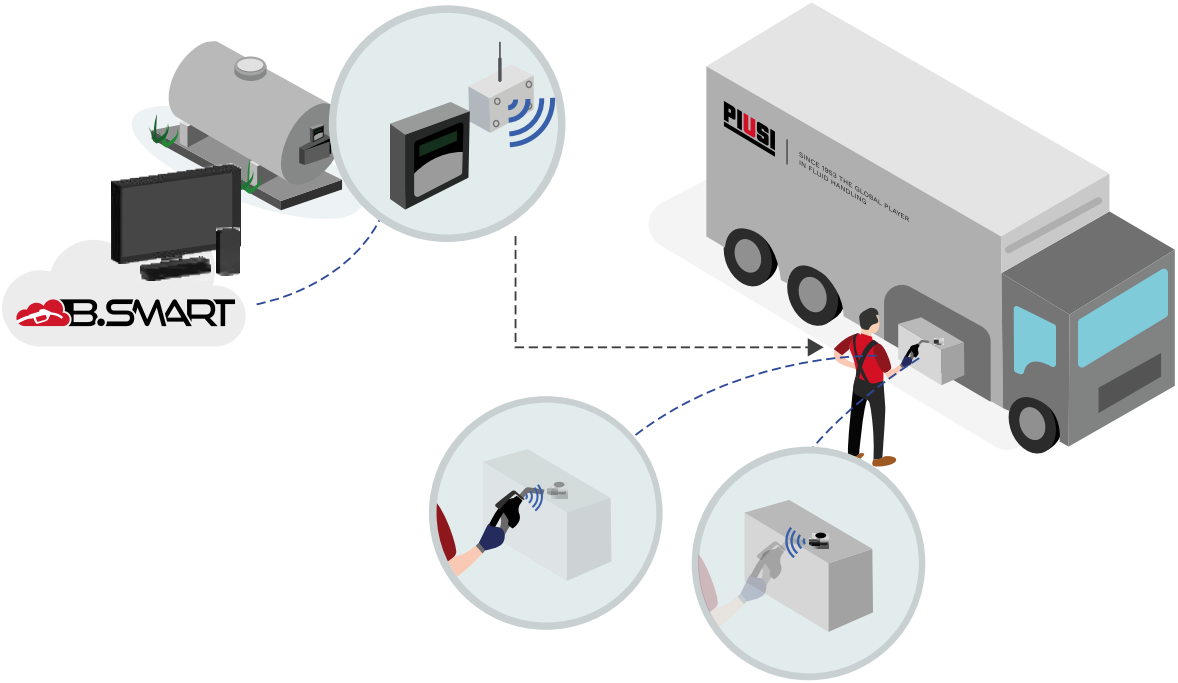


## DIMENSIONS

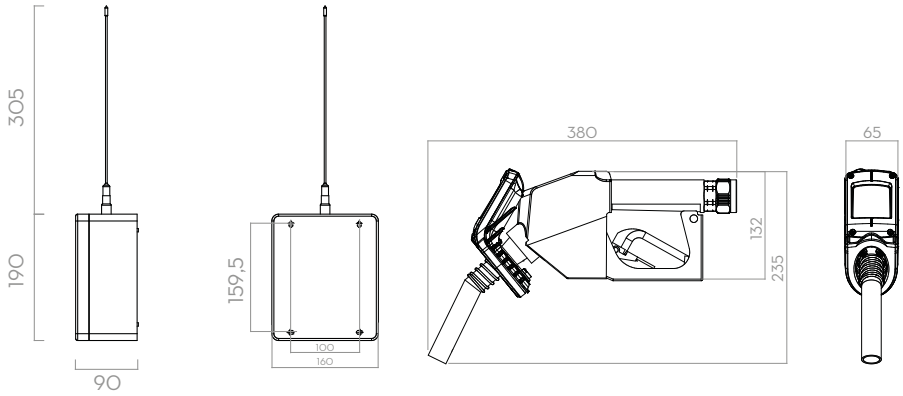


*Dimensions expressed in millimeters*

## IN THE BOX

- A B.SMART DISPENSER COMPATIBLE WITH IDENTITANK (MC BOX OR CUBE)
- A FUEL NOZZLE WITH INTEGRATED RFID READER
- A WIRELESS CONTROLLER FOR CONNECTION TO THE MANAGEMENT SYSTEM
- DURABLE, TAMPER-PROOF RFID TAGS SUITABLE FOR ANY TYPE OF TANK
- MOUNTING INSTRUCTIONS
- INSTRUCTION MANUAL

## TECHNICAL DATA

| CODE | DESCRIPTION | FLUIDS TYPE | FLOW RATE | | VOLTAGE | | | PUMP | METER | NOZZLE |
|---|---|---|---|---|---|---|---|---|---|---|
| | | | L/MIN | GPM | AC V./HZ | POWER WATT | AMP. MAX. | TYPE | TYPE | TYPE |
| F00598300 | CUBE 70 B.SMART 230V IDENTITANK | D | 70 | 18 | 230V 50HZ | 900W | 4,9A | PANTHER 72 | K600/3 | A60 |
| F00599800 | MCBOX B.SMART 100/240V IDENTITANK-60 | ANY FLUID | - | - | 100-240V 50/60HZ | 5W | 15A | - | - | A60 |
| F00599810 | MCBOX B.SMART 100/240V IDENTITANK-120 | ANY FLUID | - | - | 100-240V 50/60HZ | 5W | 15A | - | - | A120 |

## ACCESSORIES

| | |
|---|---|
| F00790400 | KIT TAG HEAVY DUTY 10 PCS IDENTITANK |
| F00790410 | KIT TAG HEAVY DUTY 50 PCS IDENTITANK |
| F00790300 | KIT TAG READER IDENTITANK - USB |

# CUBE B.SMART

## FEATURES

- STURDY STRUCTURE
- COMPACT DESIGN
- NATIVE WITH B.SMART CLOUD SOFTWARE
- KIT UPGRADE 1.0/2018 AVAILABLE
- IP55

The CUBE B.SMART fuel dispenser, available in the 70 and 90 litre/min versions with both AC and DC supply, is equipped with a self-priming vane pump with built-in bypass that ensures high performance. The anti-vibration support of the diesel dispenser guarantees silent operation and practicality, while the mechanical seal and the thermal protection of the induction motor against overheating make the product reliable and safe. CUBE B.SMART is equipped with an automatic nozzle with swivel connection. The installation of the mesh filter on the suction side ensures the pump longevity, as it prevents foreign bodies from ending up in the rotor and causing a blockage and consequent damage.

### PERFORMANCE

| | |
|---|---|
| UP TO 90 L/MIN<br>FLOW RATE | AC/DC<br>VOLTAGE |
| ± 0,5%<br>ACCURACY | BLUETOOTH<br>CONNECTION |

### PACKAGING

| CODE | WEIGHT | | PACKAGING | | | N. BOXES / EUROPALLET | |
|---|---|---|---|---|---|---|---|
| | KG | LBS | MM | INCH | PCS/BOX | ✈ | 🚢 |
| F00598000 | 24 | 53 | 380X380X480 | 15,0X15,0X18,9 | 1 | - | - |
| F00598010 | 24 | 54 | 380X380X480 | 15,0X15,0X18,9 | 1 | - | - |
| F00598A1A | 20 | 44 | 380X380X480 | 15,0X15,0X18,9 | 1 | - | - |
| F00598A0A | 20 | 44 | 380X380X480 | 15,0X15,0X18,9 | 1 | - | - |

## CHART

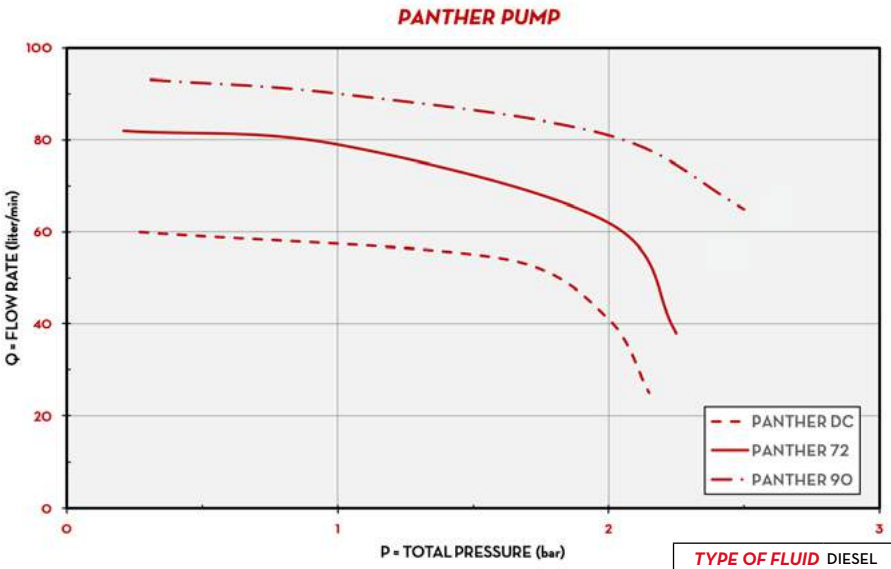


| | |
|---|---|
| TYPE OF FLUID | DIESEL |
| TEMPERATURE | 20°C |

## IN THE BOX

- CUBE B.SMART DISPENSER
- AUTOMATIC NOZZLE
- DELIVERY HOSE
- DRIVER ACCESS ADD-ON
- INSTRUCTION MANUAL

## DETAILS

SHUTTER

B.SMART MOBILE APP

B.SMART CLOUD SOFTWARE

## DIMENSIONS

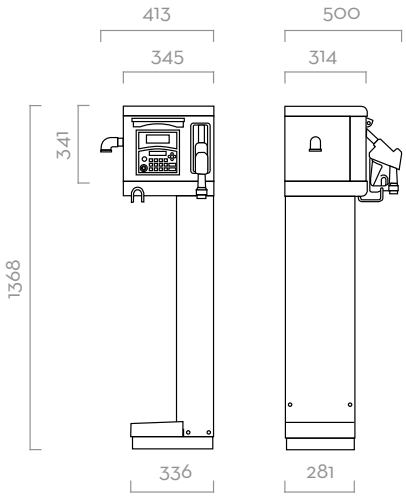


*Dimensions expressed in millimeters*

## MATERIALS

- PUMPS:
  PANTHER AC
  PANTHER DC
- METER:
  K600/3
- NOZZLE:
  AUTOMATIC NOZZLE

## TECHNICAL DATA

| CODE | DESCRIPTION | FLUIDS TYPE | FLOW RATE | | VOLTAGE | | | | PUMP | METER | NOZZLE | FILTER | INLET | HOSE | |
|---|---|---|---|---|---|---|---|---|---|---|---|---|---|---|---|
| | | | L/MIN | GPM | AC V./HZ DC VOLT | | POWER WATT | AMP. MAX. | TYPE | TYPE | TYPE | H2O FILTER | BSP | LENGTH | Ø |
| F00598000 | CUBE 70 230V B.SMART 10 DIVERS | D | 70 | 18 | 230 V | 50 HZ | 900 W | 4,2 A | PANTHER 72 | K600/3 | A60 | NO | 1" | 4M | 25MM |
| F00598010 | CUBE 90 230V B.SMART 10 DIVERS | D | 90 | 24 | 230 V | 50 HZ | 900 W | 4,9 A | PANTHER 90 | K600/3 | A120 | NO | 1" | 4M | 25MM |
| F00598A1A | CUBE 70 B.SMART 24V 10 ACCESS | D | 70 | 18 | 24V | - | 420W | 25 A | PANTHER DC | K600/3 | A70 | NO | 1" | 4M | 25MM |
| F00598A0A | CUBE 12 V B.SMART • 10 DRIVERS | D | 56 | 15 | 12 V | - | 300W | 35 A | PANTHER DC | K600/3 | A60 | NO | 1" | 4M | 25MM |

# CUBE B.SMART PRO8IGHT

## FEATURES

- STURDY STRUCTURE
- COMPACT DESIGN
- NATIVE WITH B.SMART CLOUD SOFTWARE
- INTEGRATED HOSE REEL
- INTEGRATED WATER CAPTOR FILTER
- IP55

CUBE B.SMART PROEIGHT dispenser is the new PIUSI product designed to meet the needs of the market. Thanks to the integration with the 8-meter 26-feet hose reel, CUBE B.Smart becomes even more compact, intuitive and easy to use. It is equipped with a self-priming vane pump with built-in bypass that delivers high performance refueling. The anti-vibration mounting ensures low noise and vibration, while the mechanical sealing and overheating protection of the motor enhances the product reliablity and safety. The new CUBE B.SMART dispenser with hose reel is equipped with PIUSI WATER CAPTOR, a new filter designed to absorb particles of water that may be in the liquid.

### PERFORMANCE

| | |
|---|---|
| UP TO 60 L/MIN<br>FLOW RATE | AC/DC VOLTAGE<br>HOISE LENGTH |
| 30 µm<br>WATER CAPTOR FILTER | BLUETOOTH<br>CONNECTION |

CUBE B.SMART Pro8ight

### PACKAGING

| CODE | WEIGHT | | PACKAGING | | | N. BOXES / EUROPALLET | |
|---|---|---|---|---|---|---|---|
| | KG | LBS | MM | INCH | PCS/BOX | ✈ | 🚢 |
| F00598800 | 57 | 125 | 1480X490X400 | 58,2X19X15 | 1 | - | - |

## CHART

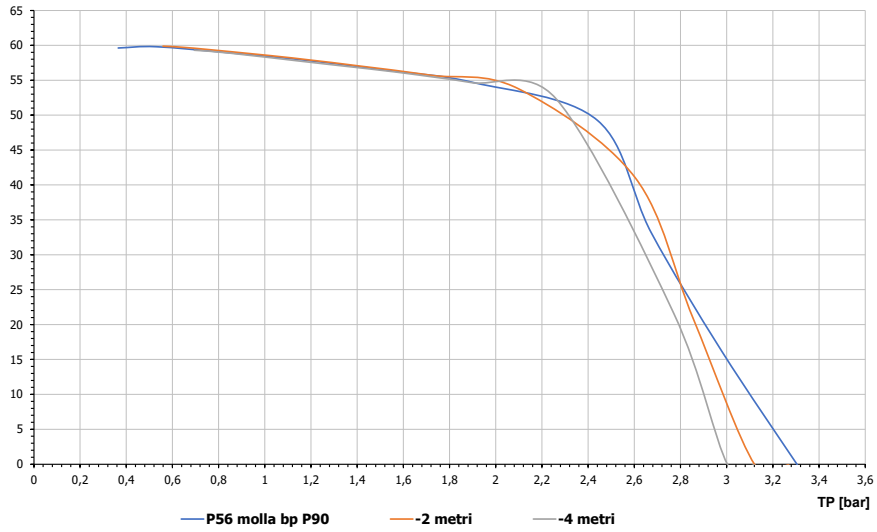


| | |
|---|---|
| TYPE OF FLUID | DIESEL |
| TEMPERATURE | 20°C |

## IN THE BOX

- CUBE B.SMART PRO8IGHT DISPENSER
- AUTOMATIC NOZZLE
- DELIVERY HOSE
- DRIVER ACCESS ADD-ON
- INSTRUCTION MANUAL

## DETAILS

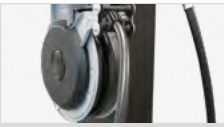

INTEGRATED HOSE REEL

B.SMART MOBILE APP

B.SMART CLOUD SOFTWARE

INTEGRATED WATER CAPTOR FILTER

## DIMENSIONS

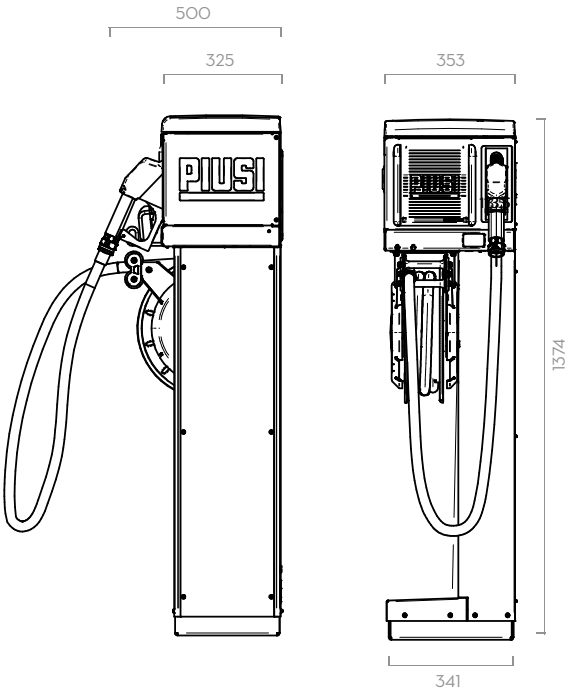


*Dimensions expressed in millimeters*

## MATERIALS

- PUMPS:
  PANTHER AC
- METER:
  K600/3
- NOZZLE:
  AUTOMATIC NOZZLE

## TECHNICAL DATA

| CODE | DESCRIPTION | FLUIDS TYPE | FLOW RATE | | VOLTAGE | | | | PUMP | METER | NOZZLE | FILTER | INLET | HOSE | |
|---|---|---|---|---|---|---|---|---|---|---|---|---|---|---|---|
| | | | L/MIN | GPM | AC V./HZ | | POWER WATT | AMP. MAX. | TYPE | TYPE | TYPE | H2O FILTER | BSP | LENGTH | ø |
| F00598800 | CUBE 70 B.SMART 230V PRO8IGHT 10 ACCESS | D | 60 | 16 | 230V | 50HZ | 600W | 2,7 A | PANTHER 72 | K600/3 | A60 | YES | 1" | 8MT | 20MM |

# SELF SERVICE B.SMART

## FEATURES

- FUEL MANAGEMENT SYSTEM B.SMART INTEGRATED
- NO SOFTWARE INSTALLATION REQUIRED
- SUITABLE FOR FLEETS OF ALL SIZES
- REAL TIME FEEDBACK FROM ANYWHERE
- BUILT-IN FILTER
- ALL-IN-ONE EQUIPMENT
- COMPACT DESIGN
- KIT UPGRADE 1.0/2018 AVAILABLE

Top quality diesel dispenser by PIUSI, combined with the innovative B.SMART fuel management system: this is the core of the new SELF SERVICE B.SMART.
A complete device specifically engineered to fit all diesel transfer needs while performing all the features of a fuel management software in terms of monitoring, controlling and managing the consumption of fuel by the fleet.
This dispenser performs: a sturdy design to ensure proper function in any working condition, a vane pump with incorporated bypass for a high flow rate (up to 90 l/min) and an oval gear meter to ensure maximum precision in measurement. An automatic nozzle with swivel connection, ergonomic and easy to handle, and a water absorption filter completes its components.

### PERFORMANCE

| | |
|---|---|
| UP TO 90 L/MIN<br>FLOW RATE | AC<br>VOLTAGE |
| ± 0,5%<br>ACCURACY | BLUETOOTH<br>CONNECTION |

### PACKAGING

| CODE | WEIGHT | | PACKAGING | | | N. BOXES / EUROPALLET | |
|---|---|---|---|---|---|---|---|
| | KG | LBS | MM | INCH | PCS/BOX | ✈ | 🚢 |
| F00748010 | 57 | 125 | 1480X490X400 | 58,3X19,3X15,7 | 1 | - | - |
| F00748000 | 61 | 133 | 1480X490X400 | 58,3X19,3X15,7 | 1 | - | - |

## CHART

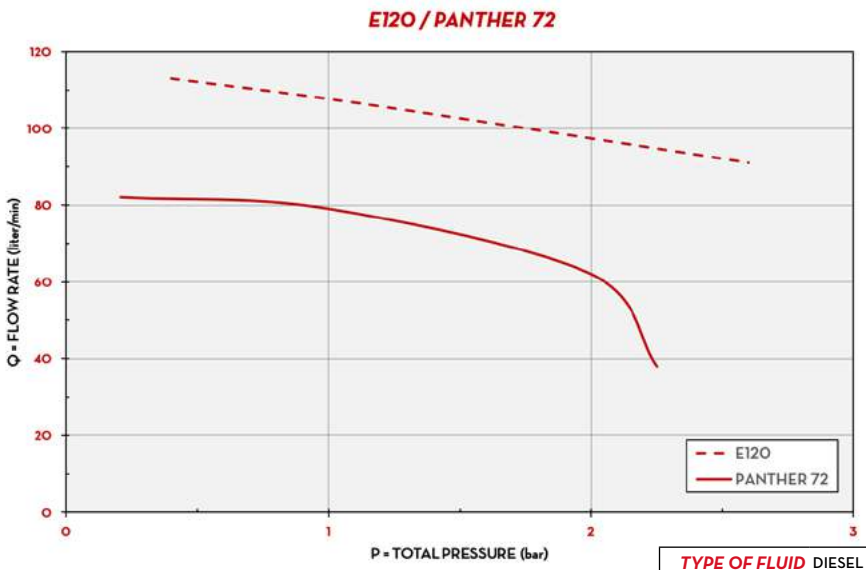


| | |
|---|---|
| TYPE OF FLUID | DIESEL |
| TEMPERATURE | 20°C |

## IN THE BOX

- SELF SERVICE B.SMART DISPENSER
- DELIVERY HOSE
- AUTOMATIC NOZZLE
- DRIVER ACCESS ADD-ON
- INSTRUCTION MANUAL

## DETAILS

SHUTTER

B.SMART MOBILE APP

B.SMART CLOUD SOFTWARE

WATER CAPTOR FILTER

## DIMENSIONS

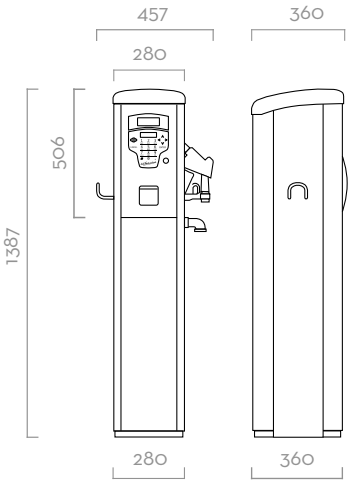


*Dimensions expressed in millimeters*

## MATERIALS

- PUMPS:
  PANTHER 72 / E120
- METER:
  K600/3
- NOZZLE:
  AUTOMATIC NOZZLE
- FILTER:
  WATER CAPTOR

## TECHNICAL DATA

| CODE | DESCRIPTION | FLUIDS TYPE | FLOW RATE | | VOLTAGE | | | | PUMP | METER | NOZZLE | FILTER | INLET | HOSE | |
|---|---|---|---|---|---|---|---|---|---|---|---|---|---|---|---|
| | | | L/MIN | GPM | AC V./HZ DC VOLT | | POWER WATT | AMP. MAX. | TYPE | TYPE | TYPE | H2O FILTER | BSP | LENGTH | Ø |
| F00748010 | SELF SERVICE 70 230V B.SMART 10 DRIVERS | D | 70 | 18 | 230 V | 50 HZ | 550 W | 3,3 A | PANTHER 72 | K600/3 | A80 | 30 µM | 1 1/2" | 4M | 25MM |
| F00748000 | SELF SERVICE 100 230V B.SMART 10 DRIVERS | D | 90 | 24 | 230 V | 50 HZ | 1150 W | 5,7 A | E120 | K600/3 | A120 | 30 µM | 1 1/2" | 4M | 25MM |

# MCBOX B.SMART

## FEATURES

- IDEALS FOR EXISTING PLANTS
- SUITABLE FOR ANY PUMPS
- PULSE METER INPUT
- NATIVE WITH B.SMART CLOUD SOFTWARE
- AVAILABLE IN COMPACT VERSION

MCBOX is an electronic control panel that allows you to control any type of AC/DC pump, pulser litre-counter, nozzle and fuel level switches. The perfect product to upgrade an existing installation or for a customized assembly.
With MC BOX B.SMART the B.SMART fuel management system is integrated.
No need for software to be installed on a PC: B.SMART works in the Cloud and allows you to monitor all fuel transactions in real time, from any site where MCBOX B.SMART is installed. Communication between MCBOX B.SMART, Phone App and Cloud Software is simple.
Also available in a compact version for installations in confined spaces.

### PERFORMANCE

| | |
|---|---|
| AC/DC<br>VOLTAGE | UP TO 500 STORABLE<br>TRANSACTIONS |
| 2 PUMPS VERSION<br>OUTPUT | BLUETOOTH<br>CONNECTION |

MCBOX B.SMART

MCBOX B.SMART COMPACT

### PACKAGING

| CODE | WEIGHT | | PACKAGING | | | N. BOXES / EUROPALLET | |
|---|---|---|---|---|---|---|---|
| | KG | LBS | MM | INCH | PCS/BOX | ✈ | 🚢 |
| F00599C00 | 2,3 | 5 | 260X240X170 | 10,2X9,4X6,6 | 1 | - | |
| F00599000 | 5,2 | 11,5 | 300X300X180 | 11.8X11.8X7.1 | 1 | - | - |
| F00599200 | 5,3 | 11,6 | 300X300X180 | 11.8X11.8X7.1 | 1 | - | - |
| F00599150 | 5,4 | 11,8 | 300X300X180 | 11.8X11.8X7.1 | 1 | - | - |

## CONNECTION SCHEME

## IN THE BOX

- MCBOX B.SMART UNIT
- DRIVER ACCESS ADD-ON
- INSTRUCTION MANUAL

## DETAILS

SHUTTER

B.SMART MOBILE APP

B.SMART CLOUD SOFTWARE

EASY ACCESS TO CONNECTION

## DIMENSIONS

### MCBOX B.SMART

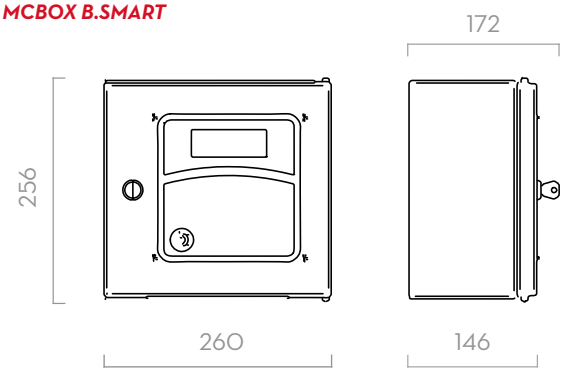


### MCBOX B.SMART COMPACT

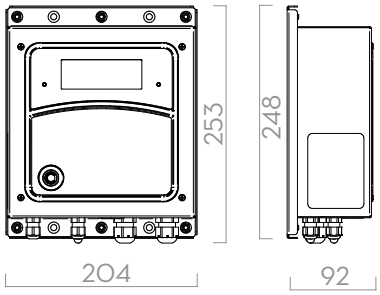


*Dimensions expressed in millimeters*

## TECHNICAL DATA

| CODE | DESCRIPTION | FLUIDS TYPE | VOLTAGE | | | | B.SMART CLOUD |
|---|---|---|---|---|---|---|---|
| | | | AC V./HZ | DC VOLT | POWER WATT | AMP. MAX. | |
| F00599C00 | MCBOX B.SMART 100-240V C 10 ACCESS - COMPACT | ANY FLUID | 100-240V 50/60 HZ | - | 5 W | 15 A | INCLUDED |
| F00599000 | MCBOX 100-240V B.SMART 10 DRIVERS | ANY FLUID | 100-240V 50/60 HZ | - | 5W | 15 A | INCLUDED |
| F00599200 | MCBOX 100-240V B.SMART 10 DRIVERS 2 PUMPS | ANY FLUID | 100-240V 50/60 HZ | - | 5W | 15 A | INCLUDED |
| F00599150 | MCBOX B.SMART 12V/24V 10 ACCESS | ANY FLUID | - | 12/24 V | 5W | | INCLUDED |

# PIUSI 3000 SUPREME B .SMART

## FEATURES

- VOLTAGE FROM 12 TO 24V*
- BLUETOOTH CONNECTION
- TOTAL CONTROL VIA APP
- VIBRATION RESISTANCE
- LOW NOISE
- COMPATIBLE WITH DIESEL UP TO B20 - HVO/XTL
- MAX. PRESSURE 1,5 BAR
- IP55

Piusi 3000 Supreme B.SMART represents a breakthrough in transportable tanks, combining safety, efficiency and management. Thanks to its cutting-edge technology and full integration with the Fuel Management System B.SMART, Piusi 3000 Supreme B.SMART gives users the ability to control every aspect of their dispensing and fleet operations, enabling them to achieve unprecedented levels of performance and reliability.
If you aim for maximum efficiency and safety for your transportable tanks, Piusi 3000 Supreme B.SMART is the best choice.

### PERFORMANCE

| | |
|---|---|
| UP TO 50 L/MIN | FROM 12V TO 24V* |
| FLOW RATE | VOLTAGE |
| CONTINUOUS DUTY | ±0,5% |
| DUTY CYCLE | ACCURACY |

* The Piusi 3000 Supreme does not have the ability to monitor the battery and does not provide any type of protection for it.

### PACKAGING

| CODE | WEIGHT | | PACKAGING | | |
|---|---|---|---|---|---|
| | KG | LBS | MM | INCH | PCS/BOX |
| F00251H00 | 5,4 | 11,9 | 270X190X180 | - | 1 |
| F00251V00 | 5,4 | 11,9 | 270X190X180 | - | 1 |
| F00251D00 | 7,4 | 16,3 | 300X300X180 | - | 1 |
| F00251K00 | 10 | 22 | 490X390X310 | - | 1 |
| F00251D10 | 11,5 | 25,3 | 490X390X310 | - | 1 |

## IN THE BOX FOR FOLLOWING CONFIGURATIONS:

| | | | |
|---|---|---|---|
| **BASE BRACKET KIT**<br>F00251K00 | PUMP<br>ELECTRIC CABLE 4M<br>ACCESS KEY (1PZ)<br>INSTRUCTION MANUAL | + | DELIVERY HOSE<br>AUTOM. NOZZLE A60 + HOOK<br>BASE BRACKET |
| **2" DIRECT MOUNT KIT**<br>F00251D10 | | + | DELIVERY HOSE<br>AUTOM. NOZZLE A60 + HOOK<br>NOZZLE HOLDER<br>DRUM CONNECTOR 2"<br>OIL & FUEL FILTER |
| **PUMP ONLY DRUM**<br>F00251D00 | | + | NOZZLE HOLDER<br>DRUM CONNECTOR 2"<br>OIL & FUEL FILTER |
| **PUMP ONLY B.O. & PUMP ONLY B.V.**<br>F00251H00<br>F00251V00 | | + | BASE BRACKET |

## WEB APP

## DETAILS

BENDING PROTECTION

ELECTRIC CABLE

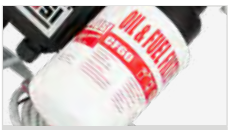

OIL & FUEL FILTER

AUTOMATIC NOZZLE A60

## DIMENSIONS

### BASE BRACKET KIT

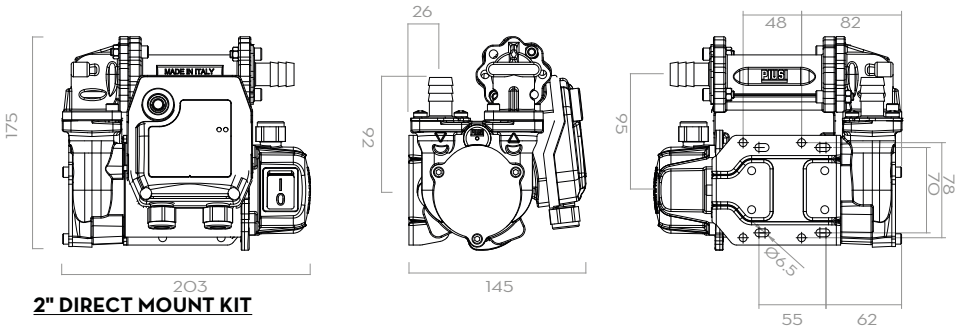


### 2" DIRECT MOUNT KIT

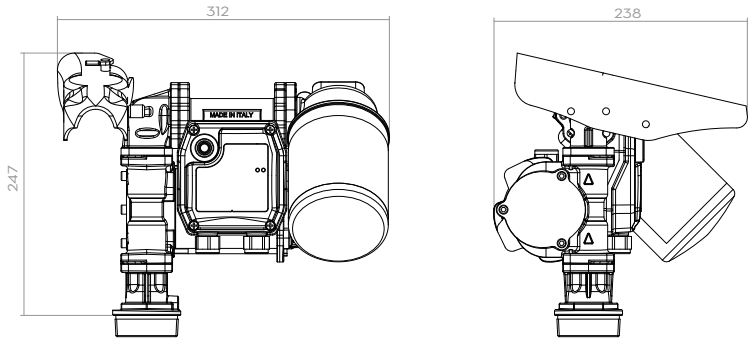


*Dimensions expressed in millimeters*

## MATERIALS

- BODY: CAST IRON
- ROTOR: SINTERED STEEL
- VANES: ACETAL RESIN
- SEAL: NBR
- SHAFT: STEEL

## ACCESSORIES

- AUTOMATIC NOZZLE A60 + HOOK COD. F00603S00 (2" DIRECT MOUNT KIT )
- AUTOMATIC NOZZLE A60 COD. F00603060 (BASE BRACKET KIT)
- DIESEL HOSE 4M (COD. F24103000)

## TECHNICAL DATA

| CODE | DESCRIPTION | FLUIDS TYPE | FLOW RATE | | VOLTAGE | | | RPM | DUTY CYCLE CONTINUOUS | FUSES CAPACITY | HOSE | | DIRT FILTER | NOZZLE |
|---|---|---|---|---|---|---|---|---|---|---|---|---|---|---|
| | | | L/MIN | GPM | DC VOLT | POWER WATT | AMP. MAX. | | | AMPERE | LENG. | Ø | | |
| F00251H00 | PIUSI 3000 SUPREME PUMP ONLY B.O. | D | 50 | 13 | FROM 12 TO 24 | 200W | 16A/8A | 2700 | YES | 25A | - | - | - | - |
| F00251V00 | PIUSI 3000 SUPREME PUMP ONLY B.V. | D | 50 | 13 | FROM 12 TO 24 | 200W | 16A/8A | 2700 | YES | 25A | - | - | - | - |
| F00251D00 | PIUSI 3000 SUPREME PUMP ONLY DRUM | D | 50 | 13 | FROM 12 TO 24 | 200W | 16A/8A | 2700 | YES | 25A | - | - | YES | - |
| F00251K00 | PIUSI 3000 SUPREME BASE BRACKET KIT | D | 50 | 13 | FROM 12 TO 24 | 200W | 16A/8A | 2700 | YES | 25A | 4MT | 3/4" | - | A60 |
| F00251D10 | PIUSI 3000 SUPREME 2" DIRECT MOUNT KIT | D | 50 | 13 | FROM 12 TO 24 | 200W | 16A/8A | 2700 | YES | 25A | 4MT | 3/4" | YES | A60 |

# SSM2.0

## FEATURES

- TANK WATCHDOG
- DRIVERS/VEHICLES MANAGEMENT
- REPORT
- FLUID INVENTORY VALUE

The new SELF SERVICE MANAGEMENT 2.0 software is the most advanced response for management and monitoring of refueling, allowing supervision of drivers, vehicles and fuel tanks. Setting up the system and getting to work has never been easier: simply connect the devices to your LAN or Wi-Fi network and click on the "Detect System" button on your PC. SELF SERVICE MANAGEMENT 2.0 will handle the rest. Use of the SELF SERVICE MANAGEMENT 2.0 software requires the new range of SELF SERVICE 2.0 dispensing devices. The ibutton key reader kit is available on request.

### PERFORMANCE

UP TO
**1000**
DIVERS / VEHICLES

**USB/WEB**
SOFTWARE VERSION
INSTALLATION

### SOFTWARE ACTIVATION MODE

**USB HARDWARE KEY**
without internet connection

**WEB EDITION**
internet connection required

**CHECK**

The cost of the consumption for every distance.

**VIEW**

Bar charts easily allow you to analyze the liters delivered each day and compare them with the average use.

The system min. requirements are:

- Monitor resolution 1280x700
- CPU: Intel® Pentium® 4 or AMD Athlon® 64 processor (2 GHz or higher)
- RAM: 2 GB
- Free space on Hard Disk: 20 GB
- Operating system: Windows 10 TH1 1507 or next version, Windows Server 2016 or next version
- Database: Microsoft SQL 2019 CU16 Express (included in the installation)

**VEHICLES**

Reads the average consumption and distance driven.

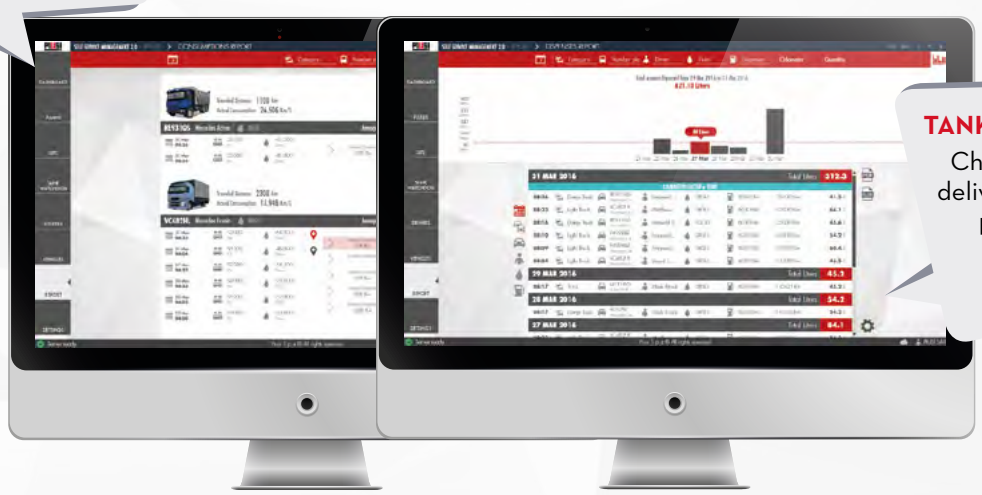

**TANK MONITORING**

Check the liters delivered over the period you specify.

## TECHNICAL DATA - USB CODE

| CODE | DESCRIPTION |
|---|---|
| F00772050 | SSM 2.0 ENTRY |
| F0077202A | SSM 2.0 ADVANCED |
| F0077204A | SSM 2.0 SUITE |
| F00772000 | SSM 2.0 CLIENT |

## TECHNICAL DATA - WEB CODE

| CODE | DESCRIPTION |
|---|---|
| F00772250 | SSM 2.0 ENTRY - WEB EDITION |
| F0077222A | SSM 2.0 ADVANCED - WEB EDITION |
| F0077224A | SSM 2.0 SUITE - WEB EDITION |
| F00772200 | SSM 2.0 CLIENT - WEB EDITION |

THE PURCHASE OF ADDITIONAL CLIENT LICENSES ENABLES YOU TO USE THE VARIOUS VERSIONS OF SELF SERVICE MANAGEMENT 2.0 ON MULTIPLE WORKSTATIONS.

# DATA TRANSFER SSM2.0

Among the equipment related to SSM 2.0, PIUSI has developed a set of technological solutions able to connect the electronic/mechanical device to the fluid control system, that is the software that organizes the operation of the hardware; in this case SELF SERVICE MANAGEMENT 2.0. How does data transfer with SSM2.0 work? It depends on the technology required.

**Direct downloading**
Use your Manager Key to transfer the data from dispenser to PC: it is enough to touch the dispenser with the key and then use the key reader to transfer the data collected.

**LAN/Wi-Fi**
The way to receive in real time all information regarding the transactions: using PWLAN or PW WiFi the software recognizes the fuel dispensers and it will automatically send the data to the SELF SERVICE MANAGEMENT 2.0 software.

**Mobile Network**
The brand-new PW MOBILE 4G 2.0 allows to install dispenser wherever desired, even in the most remote area, without the need of a local network: the device uses the mobile 4G technology to communicate and transfer data.

## PW MOBILE

A new communication system that allows you to transfer data using mobile 4G network.

## KEY READER & MANAGER KEY 2.0

## LAN

A network card that allows the RS485 signal to be converted for connection to a LAN, through a simple and intuitive interface.

## PW WI-FI

A device that allows to convert the RS485 signal to Wi-Fi, through a simple and intuitive interface.

## TECHNICAL DATA

| CODE | DESCRIPTION |
|---|---|
| F1226201A | KIT KEY READER SELF SERVICE 2.0 |
| F20552010 | MANAGER KEY 2.0 (GREY) |
| F1271012A | PW WI-FI 2.0 |
| F12710130 | PW MOBILE 4G 2.0 |

# CUBE MC 2.0

## FEATURES

- STURDY STRUCTURE
- BUILT-IN LAN ADAPTER
- COMPACT DESIGN
- SSM 2.0 SOFTWARE REQUIRED
- IP55
- IDEAL FOR FUEL MANAGEMENT

The PIUSI CUBE MC 2.0 is the perfect solution for those who need safe and simple, high-volume fuel dispensing operations while checking transactions and managing their own fleet. The system is equipped with the same main feature of the CUBE MC, and includes a built-in LAN connection. SSM 2.0 Software required.

### PERFORMANCE

| UP TO 90 L/MIN | UP TO 1000 |
|---|---|
| FLOW RATE | USERS |

| ± 0,5% |
|---|
| ACCURACY |

CUBE MC 2.0

CUBE MC 2.0 WITH PEDESTAL (OPTIONAL)

### PACKAGING

| CODE | WEIGHT | | PACKAGING | | | N. BOXES / EUROPALLET | |
|---|---|---|---|---|---|---|---|
| | KG | LBS | MM | INCH | PCS/BOX | ✈ | 🚢 |
| F005960OB | 25 | 55 | 400X400X460 | - | 1 | 12 | 24 |
| F005961OB | 25 | 55 | 400X400X460 | - | 1 | 12 | 24 |

## CHART

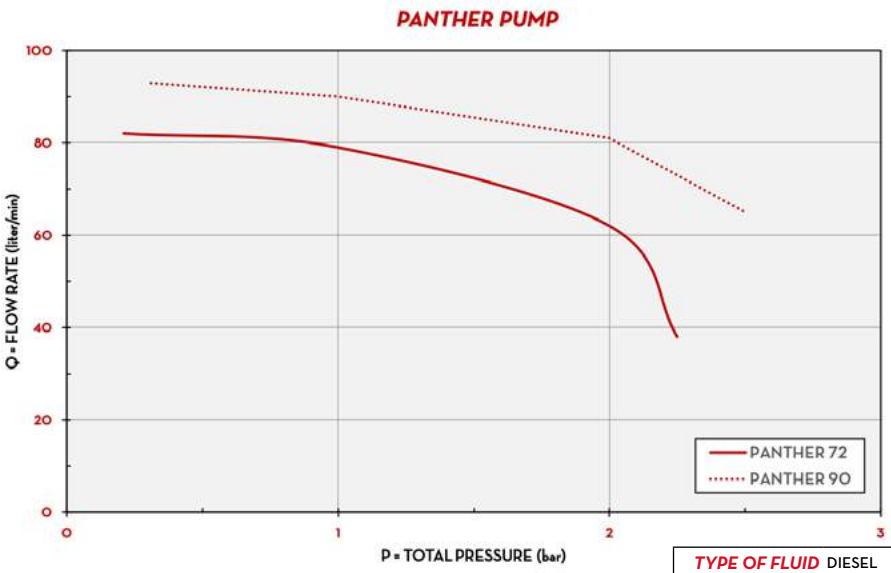


| | |
|---|---|
| TYPE OF FLUID | DIESEL |
| TEMPERATURE | 20°C |

## IN THE BOX

- CUBE MC 2.0 DISPENSER
- AUTOMATIC NOZZLE
- DELIVERY HOSE
- INSTRUCTION MANUAL

## DETAILS

SHUTTER

USER&VEHICLE KEY (n.i.)

SSM 2.0 SELF SERVICE MANAGEMENT

SSM 2.0 SOFTWARE

SSM 2.0 SELF SERVICE MANAGEMENT

DATA TRANSFER SSM2.0

## DIMENSIONS

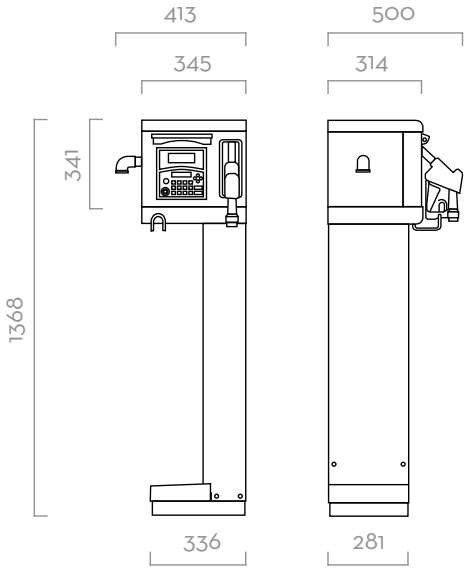


*Dimensions expressed in millimeters*

## MATERIALS

- PUMPS:
  PANTHER AC
  PANTHER DC
- METER:
  K600/3
- NOZZLE:
  AUTOMATIC NOZZLE

## TECHNICAL DATA

| CODE | DESCRIPTION | FLUIDS TYPE | FLOW RATE | | VOLTAGE | | | PUMP | METER | NOZZLE | FILTER | INLET | HOSE LENGTH | SELF SERVICE MANAGEMENT 2.0 |
|---|---|---|---|---|---|---|---|---|---|---|---|---|---|---|
| | | | L/MIN | GPM | AC V./HZ DC VOLT | POWER WATT | AMP. MAX. | TYPE | TYPE | TYPE | H2O FILTER | BSP | METERS | |
| F0059600B | CUBE 70 MC 2.0 | D | 70 | 18 | 230/50 | 900 | 4,9 | PANTH 72 | K600 | A60 | NO | 1" | 4 | REQUIRED |
| F0059610B* | CUBE 90 MC 2.0 | D | 90 | 23,8 | 230/50 | 900 | 4,9 | PANTH 90 | K600 | A120 | NO | 1" | 4 | REQUIRED |

*DUTY CYCLE 30MIN ON/OFF

# SELF SERVICE MC 2.0

## FEATURES

- STURDY STRUCTURE
- ALL-IN-ONE DISPENSER
- BUILT-IN LAN ADAPTER
- FRONT DOOR FOR EASY MAINTENANCE
- SSM 2.0 SOFTWARE REQUIRED
- IP55
- IDEAL FOR FUEL MANAGEMENT

The PIUSI SELF SERVICE MC 2.0 is a non-commercial fuel diesel dispenser able to fit any fleet management requirement. It requires the SSM 2.0 software to work. Equipped with 90 l/min continuous duty pump, it is suitable for any fleet dimension.

### PERFORMANCE

| | |
|---|---|
| UP TO 90 L/MIN<br>FLOW RATE | AC CONTINUOUS DUTY<br>VOLTAGE |
| ± 0,5%<br>ACCURACY | UP TO 1000<br>USERS |

ELECTRONIC METER INTEGRATED

SELF SERVICE MC 2.0

### PACKAGING

| CODE | WEIGHT | | PACKAGING | | | N. BOXES / EUROPALLET | |
|---|---|---|---|---|---|---|---|
| | KG | LBS | MM | INCH | PCS/BOX | ✈ | 🚢 |
| COLUMN VERSION | | | | | | | |
| F0074302B | 75 | 165 | 1478X488X400 | - | 1 | 6 | 4 |

## CHART

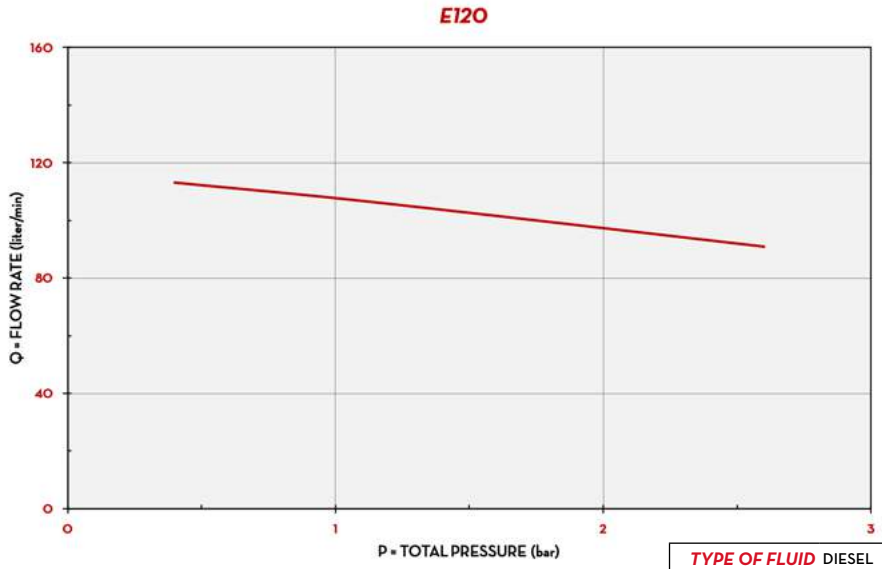


| | |
|---|---|
| TYPE OF FLUID | DIESEL |
| TEMPERATURE | 13°C |

## IN THE BOX

- SELF SERVICE MC 2.0 DISPENSER
- DELIVERY HOSE
- AUTOMATIC NOZZLE
- INSTRUCTION MANUAL

## DETAILS

WATER CAPTOR FILTER

DRIVER&VEHICLE KEY (n.i.)

SSM 2.0 SOFTWARE

DATA TRANSFER SSM2.0

## DIMENSIONS

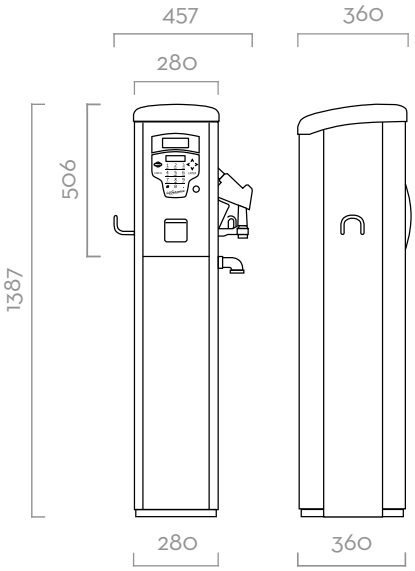


*Dimensions expressed in millimeters*

## MATERIALS

- PUMPS:
  E80 / E120
- METER:
  K600/3
- NOZZLE:
  AUTOMATIC NOZZLE
- FILTER:
  WATER CAPTOR

## TECHNICAL DATA

| CODE | DESCRIPTION | FLUIDS TYPE | FLOW RATE | | VOLTAGE | | | PUMP | METER | NOZZLE | FILTER | | INLET | HOSE LENGTH | SELF SERVICE MANAGEMENT 2.0 |
|---|---|---|---|---|---|---|---|---|---|---|---|---|---|---|---|
| | | | L/MIN | GPM | AC V./HZ DC VOLT | POWER WATT | AMP. MAX. | TYPE | TYPE | TYPE | H2O FILTER | FILTERING CAPACITY | BSP | METERS | |
| COLUMN VERSIONS | | | | | | | | | | | | | | | |
| F0074302B | SELF SERVICE 100 MC 2.0 | D | 90 | 24 | 230/50 | 1150 | 5,7 | E120 | K600 | A120 | YES | 30µ | 1" 1/2 | 4 | REQUIRED |

# SELF SERVICE FM 2.0

## FEATURES

- IDEAL FOR FUEL MANAGEMENT
- TANK LEVEL INDICATOR
- TICKET PRINTER
- MULTI-USER MANAGEMENT
- STURDY STRUCTURE
- EASY MAINTENANCE
- HIGH DISPLACEMENT VANE PUMP
- SSM 2.0 SOFTWARE REQUIRED
- IP55

The PIUSI SELF SERVICE FM 2.0 is the top-level, all-in-one dispenser for fuel with integrated LAN connection to guarantee continuous communication between dispenser and PC, water captor filter to ensure the highest purity of fluids, OCIO 2.0 tank level indicator and an electronic panel able to manage up to 1000 users and 650 transactions. Compatible with SSM 2.0 software.

### PERFORMANCE

| | |
|---|---|
| UP TO 90 L/MIN<br>FLOW RATE | AC CONTINUOUS DUTY<br>VOLTAGE |
| ± 0,5%<br>ACCURACY | UP TO 1000<br>USERS |

INTEGRATED TICKET PRINTER

SELF SERVICE FM 2.0

### PACKAGING

| CODE | WEIGHT | | PACKAGING | | | N. BOXES / EUROPALLET | |
|---|---|---|---|---|---|---|---|
| | KG | LBS | MM | INCH | PCS/BOX | ✈ | |
| COLUMN VERSION | | | | | | | |
| F0074301A | 75 | 165 | 1478X488X400 | - | 1 | 6 | 4 |

## CHART

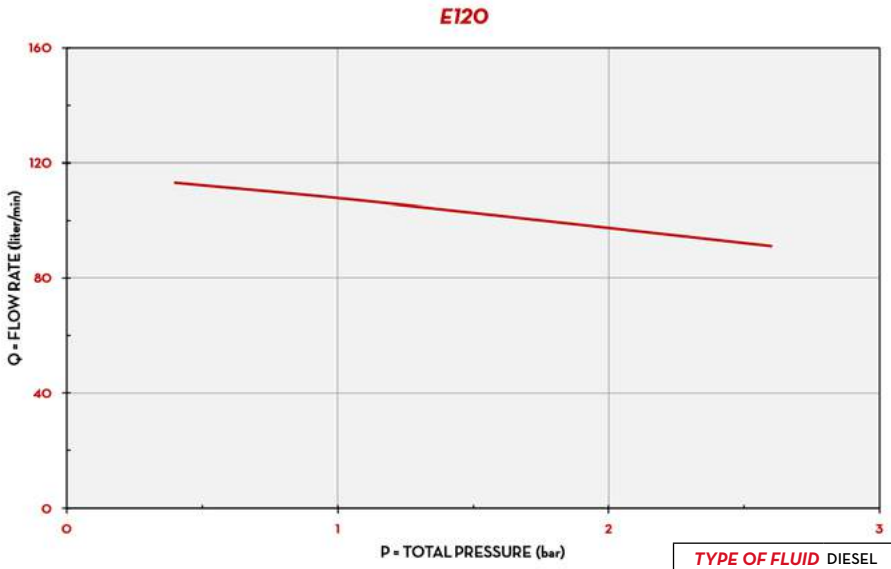


| | |
|---|---|
| TYPE OF FLUID | DIESEL |
| TEMPERATURE | 13°C |

## IN THE BOX

- SELF SERVICE FM 2.0 DISPENSER
- DELIVERY HOSE
- AUTOMATIC NOZZLE
- INSTRUCTION MANUAL

## DETAILS

WATER CAPTOR FILTER

DRIVER&VEHICLE KEY (n.i.)

SSM 2.0 SELF SERVICE MANAGEMENT
SSM 2.0 SOFTWARE

OCIO 2.0 INTEGRATED

## DIMENSIONS

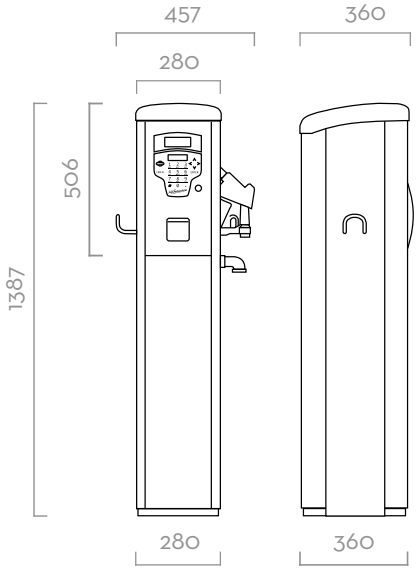


*Dimensions expressed in millimeters*

## MATERIALS

- PUMP:
  E120
- METER:
  K600/3
- NOZZLE:
  AUTOMATIC NOZZLE
- FILTER:
  WATER CAPTOR

## TECHNICAL DATA

| CODE | DESCRIPTION | FLUIDS TYPE | FLOW RATE | | VOLTAGE | | | PUMP | METER | NOZZLE | FILTER | | INLET | HOSE LENGTH | SELF SERVICE MANAGEMENT 2.0 |
|---|---|---|---|---|---|---|---|---|---|---|---|---|---|---|---|
| | | | L/MIN | GPM | AC V./HZ DC VOLT | POWER WATT | AMP. MAX. | TYPE | TYPE | TYPE | H2O FILTER | FILTERING CAPACITY | BSP | METERS | |
| COLUMN VERSIONS | | | | | | | | | | | | | | | |
| F0074301A | SELF SERVICE 100 FM 2.0 | D | 90 | 24 | 230/50 | 1150 | 5,7 | E120 | K600 | A120 | YES | 30µ | 1" 1/2 | 4 | REQUIRED |

# MCBOX 2.0

## FEATURES

- FLEET MANAGEMENT
- SUITABLE FOR ANY PUMP
- PULSE METER INPUT
- LAN/WI-FI VERSION AVAILABLE
- SSM2.0 SOFTWARE REQUIRED

The PIUSI MCBOX 2.0 is the evolution of the MCBOX system thanks to the integration with the 2.0 features: fuel consumption monitoring and report, fleet management, vehicles and users control. It is suitable to manage and control an existing pump, pulse meter and nozzle.

### PERFORMANCE

| UP TO 1000 | AC VOLTAGE |
|---|---|
| USERS / VEHICLES | POWER |

MC BOX 2.0

### PACKAGING

| CODE | WEIGHT | | PACKAGING | | |
|---|---|---|---|---|---|
| | KG | LBS | MM | INCH | PCS/BOX |
| F0059701A | 6 | 13,2 | 300X300X330 | 11,8X11,8X13 | 1 |
| F0059702A | 6 | 13,2 | 300X300X330 | 11,8X11,8X13 | 1 |

ANY BIODIESEL · AIR · ANTIFREEZE · AdBlue® · BIODIESEL · DIESEL · FOOD · GASOLINE · GREASE · KEROSENE · OIL · WATER · WINDSCREEN

## CONNECTION SCHEME

## IN THE BOX

- MCBOX 2.0 UNIT
- LAN OR WI-FI ADAPTER
- INSTRUCTION MANUAL

## DETAILS

SHUTTER

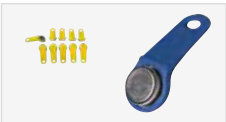

USER&VEHICLE KEY

SSM 2.0 SELF SERVICE MANAGEMENT

SSM 2.0 SOFTWARE (pag. 20)

EASY ACCESS TO CONNECTION

## DIMENSIONS

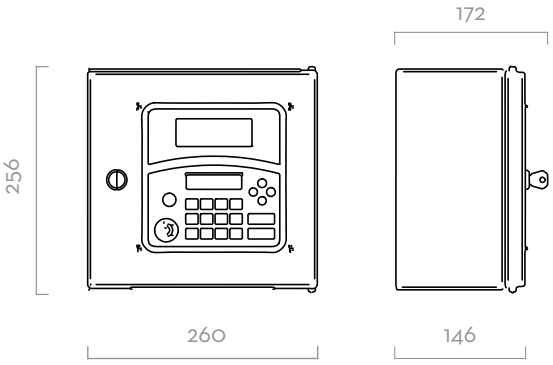


*Dimensions expressed in millimeters*

## TECHNICAL DATA

| CODE | DESCRIPTION | FLUIDS TYPE | CONNECTION | VOLTAGE | | | SSM 2.0 SOFTWARE |
|---|---|---|---|---|---|---|---|
| | | | | AC V./HZ | POWER WATT | AMP. MAX. (load motor) | |
| F0059701A | MCBOX LAN 2.0 90-240V 50/60HZ | A Ad B D F G G K O W W | LAN | 90-240 V 50/60 HZ | 10 | 50 | REQUIRED |
| F0059702A | MCBOX 2.0 WIFI 90-240V 50/60HZ | A Ad B D F G G K O W W | WI-FI | 90-240 V 50/60 HZ | 10 | 25 | REQUIRED |

# SSM AGILIS

## FEATURES

- VIRTUAL TANK MONITORING
- EASY INSTALLATION
- REPORT TRANSACTION
- CUSTOMIZABLE EXPORTS

AGILIS products can be used on their own, but with the SSM AGILIS software they become true allies of the company owner.
This software is constantly being developed and updated by PIUSI, so much so that it is the benchmark for all entry-level fuel management systems to easily, and comprehensively, monitor dispensing in every company vehicle.

**AGILIS IS THE IDEAL SYSTEM FOR SMALL & MEDIUM ENTERPRISES**

### PERFORMANCE

| UP TO 16 | USB/WEB SOFTWARE VERSION |
|---|---|
| DISPENSERS | INSTALLATION |

### SOFTWARE ACTIVATION MODE

**USB HARDWARE KEY**
without internet connection

**WEB EDITION**
internet connection required

## An effective system for small and medium enterprises that use their own tanks for refuelling their work vehicles with diesel

- Offers a wide range of solutions in terms of applications, dispenser type and voltage
- Authorises access to fuel simply and automatically, by means of a PIN or yellow key
- Manages up to 250 users per dispenser
- Monitors tank level (virtual tanks only)
- Records all dispensing data
- Easy to connect to your computer in the way that suits you best: PW14, PW Mobile, PW Lan, PW Wifi, Manager Key
- Exports full, custom reports
- Works both with and without dedicated software

## BENEFITS

**Prevents losses and unauthorised withdrawals**

**Prevents machine downtimes caused by fuel shortages**

**Optimises reporting, thereby freeing up company resources**

**Provides long service-life due to its rugged construction, high quality and ease of use**

### TECHNICAL DATA

| CODE | DESCRIPTION |
|---|---|
| F00773050 | SELF SERVICE MANAGEMENT AGILIS - USB |
| F00773250 | SELF SERVICE MANAGEMENT AGILIS - WEB |

# DATA TRANSFER AGILIS

DATA TRANSFER SSM AGILIS is a set of different solutions that let to download the transactions from the dispensers to the SELF SERVICE MANAGEMENT AGILIS software. The great variety of the offer is based on the technology required.

**Manual download**
The easiest way to download the informations is through the Manager key, it is enough to touch the dispenser with the key to transfer all the transactions and download them on the software.

**Local network**
Use the local network Lan/Wi-Fi to download the dispenser to your pc. By choosing between the PWLAN or PW Wi-Fi it is possible to set up a connection that let you receive all the transactions in real time.

**Mobile network**
Thanks to the new PW MOBILE 4G is now possible to install all the dispensers everywhere in the world with just the need of a mobile network coverage, with SIM card, avoiding all the local network configurations.

### PW14 / RS 485

Connection via RS485 cable with USB converter.

### KEY READER, MANAGER KEY & MANAGER KEY USB TYPE C

### PW LAN

A device that allows to convert the RS485 signal to LAN, through a simple and intuitive interface.

### PW WI-FI

A device that allows to convert the RS485 signal to Wi-Fi, through a simple and intuitive interface.

### PW MOBILE

A new communication system that allows you to transfer data using mobile 4G network.

## TECHNICAL DATA

| CODE | DESCRIPTION |
|---|---|
| F13292000 | PW 14 - USB CONVERTER |
| F1226201A | KIT KEY READER |
| F23525000 | MANAGER KEY USB TYPE C |
| F1249600A | MANAGER KEY |
| F1271005A | PW-LAN |
| F1271004B | PW-WIFI |
| F1271015A | PW MOBILE 4G |

# CUBE MC

## FEATURES

- MULTI-USER MANAGEMENT
- ALL-IN-ONE EQUIPMENT
- COMPACT DESIGN
- COMPATIBLE WITH SSM AGILIS SOFTWARE
- SUCTION FILTER
- IP55

The PIUSI CUBE MC is the upgraded version of the world famous CUBE dispenser equipped with an electronic panel able to manage up to 250 users and 255 transactions. The sturdy structure includes a self-priming vane pump, built-in bypass, automatic nozzle, and integrated nozzle holder with start/stop pump lever.

Upgrade your MC hardware to B.SMART with KIT UPGRADE 1.0/2018.

### PERFORMANCE

| | |
|---|---|
| UP TO 70 L/MIN<br>FLOW RATE | AC/DC<br>VOLTAGE |
| ± 0,5%<br>ACCURACY | UP TO 250<br>USERS |

CUBE 70 MC

CUBE 70 MC WITH PEDESTAL (OPTIONAL)

### PACKAGING

| CODE | WEIGHT | | PACKAGING | | | N. BOXES / EUROPALLET | |
|---|---|---|---|---|---|---|---|
| | KG | LBS | MM | INCH | PCS/BOX | ✈ | 🚢 |
| F0059415D | 25 | 55 | 400X400X460 | - | 1 | 12 | 24 |
| F0059400E | 25 | 55 | 400X400X460 | - | 1 | 12 | 24 |
| F0059413D | 25 | 55 | 400X400X460 | - | 1 | 12 | 24 |

## CHART

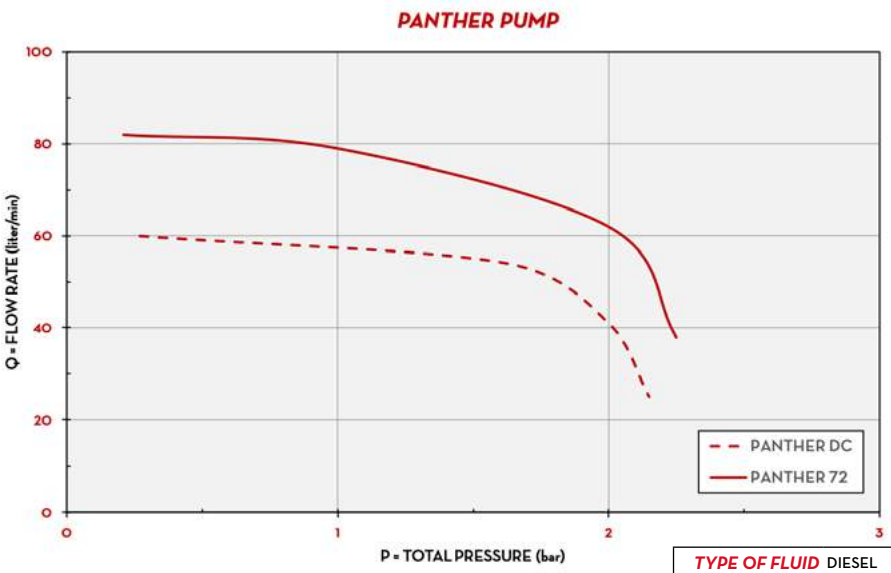


| | |
|---|---|
| TYPE OF FLUID | DIESEL |
| TEMPERATURE | 22°C |

## IN THE BOX

- CUBE MC DISPENSER
- AUTOMATIC NOZZLE
- DELIVERY HOSE
- INSTRUCTION MANUAL

## DETAILS

SHUTTER

DRIVER KEY (not included)

AGILIS SELFSERVICE MANAGEMENT

DATA TRANSFER AGILIS

AGILIS SELFSERVICE MANAGEMENT

SSM AGILIS SOFTWARE

## DIMENSIONS

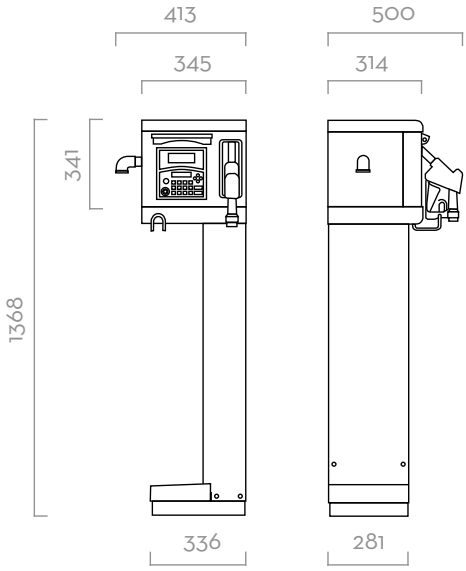


*Dimensions expressed in millimeters*

## MATERIALS

- PUMPS:
  PANTHER AC
  PANTHER DC
- METER:
  K600/3
- NOZZLE:
  AUTOMATIC NOZZLE

## TECHNICAL DATA

| CODE | DESCRIPTION | FLUIDS TYPE | FLOW RATE | | VOLTAGE | | | PUMP | METER | NOZZLE | FILTER | INLET | HOSE | | PC | USERS |
|---|---|---|---|---|---|---|---|---|---|---|---|---|---|---|---|---|
| | | | L/MIN | GPM | AC V./HZ DC VOLT | POWER WATT | AMP. MAX. | TYPE | TYPE | TYPE | H2O FILTER | BSP | LENGTH | Ø | CON-NECTION | N. |
| F0059415D | CUBE 70 MC 230V/50HZ 250U AGILIS | D | 70 | 18 | 230/50 | 800 | 3.9 | PANTH 72 | K600 | A60 | NO | 1" | 4M | 1" | YES | 250 |
| F0059400E | CUBE 70 MC 230V/50HZ 80U AGILIS | D | 70 | 18 | 230/50 | 800 | 3.9 | PANTH 72 | K600 | A60 | NO | 1" | 4M | 1" | YES | 80 |
| F0059413D | CUBE 70 MC 12V 80U AGILIS | D | 60 | 15 | 12 | 420 | 35 | PANTH DC | K600 | A60 | NO | 1" | 4M | 1" | YES | 80 |

UPON REQUEST IT IS AVAILABLE WITH DIFFERENT VOLTAGES AND 60 HZ FREQUENCY

# SELF SERVICE MC

## FEATURES

- MULTI-USER MANAGEMENT
- WATER CAPTOR FILTER
- ALL-IN-ONE EQUIPMENT
- COMPACT DESIGN
- COMPATIBLE WITH SSM AGILIS SOFTWARE
- IP55

The PIUSI SELF SERVICE MC is a complete device suitable to fit all diesel dispensing needs. With its sturdy structure, this dispenser is equipped with a high capacity vane pump, built-in bypass, automatic nozzle, water captor filter and electronic panel able to manage up to 80 users and 255 transactions.

### PERFORMANCE

| | |
|---|---|
| UP TO 90 L/MIN — FLOW RATE | AC CONTINUOUS DUTY — POWER |
| ± 0,5% — ACCURACY | UP TO 250 — USERS |

Upgrade your MC hardware to B.SMART with KIT UPGRADE 1.0/2018.

ELECTRONIC METER INTEGRATED

SELF SERVICE MC

### PACKAGING

| CODE | WEIGHT | | PACKAGING | | | N. BOXES / EUROPALLET | |
|---|---|---|---|---|---|---|---|
| | KG | LBS | MM | INCH | PCS/BOX | ✈ | 🚢 |
| **COLUMN VERSION** | | | | | | | |
| F00738O1E | 67 | 148 | 1478X488X400 | - | 1 | 6 | 4 |
| F00741O1E | 75 | 165 | 1478X488X400 | - | 1 | 6 | 4 |
| **TANK VERSION** | | | | | | | |
| F00738B0E | 57 | 126 | 1080X488X400 | - | 1 | 6 | 4 |
| F00741B0E | 65 | 143 | 1080X488X400 | - | 1 | 6 | 4 |

## CHART

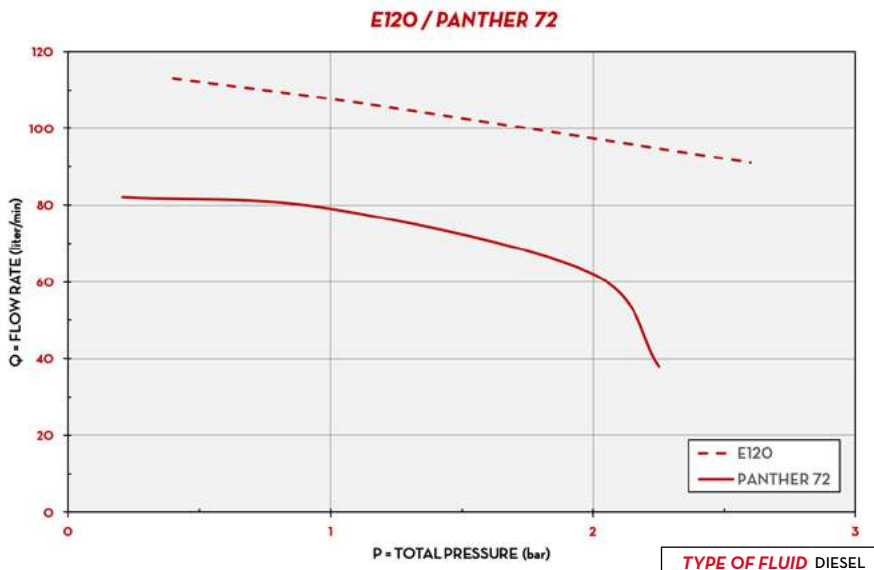


| | |
|---|---|
| TYPE OF FLUID | DIESEL |
| TEMPERATURE | 20°C |

## IN THE BOX

- SELF SERVICE MC DISPENSER
- DELIVERY HOSE
- AUTOMATIC NOZZLE
- INSTRUCTION MANUAL

## DETAILS

TANK VERSION AVAIVLABLE

WATER CAPTOR FILTER

DRIVER KEY (not included)

AGILIS SELFSERVICE MANAGEMENT
SSM AGILIS SOFTWARE

## DIMENSIONS

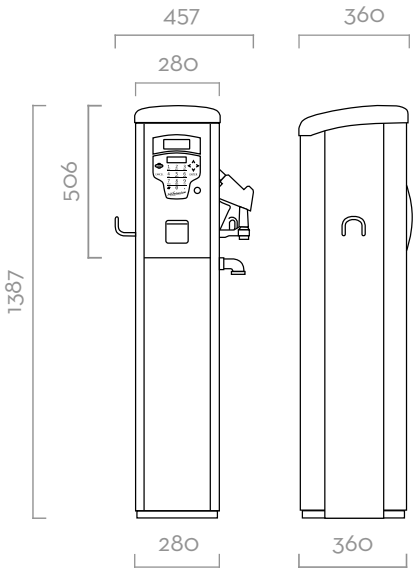


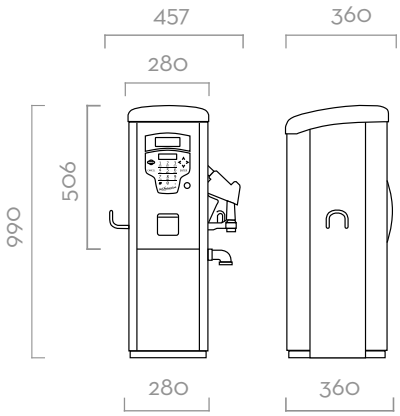


*Dimensions expressed in millimeters*

## MATERIALS

- PUMPS:
  PANTHER 72 / E120
- METER:
  K600/3
- NOZZLE:
  AUTOMATIC NOZZLE
- FILTER:
  WATER CAPTOR

## TECHNICAL DATA

| CODE | DESCRIPTION | FLUIDS TYPE | FLOW RATE | | VOLTAGE | | | PUMP | METER | NOZZLE | FILTER | | INLET | HOSE LENGTH | PC |
|---|---|---|---|---|---|---|---|---|---|---|---|---|---|---|---|
| | | | L/MIN | GPM | AC V./HZ DC VOLT | POWER WATT | AMP. MAX. | TYPE | TYPE | TYPE | H2O FILTER | FILTERING CAPACITY | BSP | METERS | CONNECTION |
| **COLUMN VERSIONS** | | | | | | | | | | | | | | | |
| F00738O1E | SELF SERVICE 70 MC 230V/50HZ AGILIS | D | 70 | 18 | 230/50 | 800 | 3.9 | PANTH 72 | K600 | A80 | SI | 30µ | 1" 1/2 | 4 | SI |
| F00741O1E | SELF SERVICE 100 MC 230V/50HZ AGILIS | D | 90 | 24 | 230/50 | 1100 | 5.5 | E 120 | K600 | A120 | SI | 30µ | 1" 1/2 | 4 | SI |
| **TANK VERSIONS** | | | | | | | | | | | | | | | |
| F00738BOE | SELF SERVICE TANK 70MC 230V AGILIS | D | 70 | 18 | 230/50 | 800 | 3,9 | PANTH 72 | K600 | A80 | NO | - | 1" 1/2 | 4 | SI |
| F00741BOE | SELF SERVICE TANK100MC 230V AGILIS | D | 90 | 24 | 230/50 | 1100 | 5,5 | E 120 | K600 | A120 | NO | - | 1" 1/2 | 4 | SI |

UPON REQUEST IT IS AVAILABLE WITH DIFFERENT VOLTAGES AND 60 HZ FREQUENCY

# MCBOX

## FEATURES

- ACCESS CONTROL
- SUITABLE FOR ANY PUMP
- PULSE METER INPUT
- EASY TO INSTALL
- MULTI USERS
- COMPATIBLE WITH SSM AGILIS SOFTWARE
- AVAILABLE IN COMPACT VERSION

The PIUSI MCBOX is a practical electronic multi-user control panel that allows to manage and control an existing pump, pulse meter and nozzle. Integrated with the SELF SERVICE MANAGEMENT AGILIS, it grants the possibility to download all the transactions. Also available in a compact version for installations in confined spaces.

### PERFORMANCE

| UP TO 250 | AC/DC VOLTAGE |
|---|---|
| USERS | POWER |

MCBOX

MCBOX COMPACT

### PACKAGING

| CODE | WEIGHT | | PACKAGING | | |
|---|---|---|---|---|---|
| | KG | LBS | MM | INCH | PCS/BOX |
| F13980C00 | 2,3 | 5 | 260X240X170 | 10,2X9,4X6,6 | 1 |
| F1398000D | 5 | 11 | 300X300X180 | 11,8X11,8X7 | 1 |
| F1398005C | 5 | 11 | 300X300X180 | 11,8X11,8X7 | 1 |
| F13980130 | 5 | 11 | 300X300X180 | 11,8X11,8X7 | 1 |

ANY BIODIESEL · AIR · ANTIFREEZE · AdBlue® · BIODIESEL · DIESEL · FOOD · GASOLINE · GREASE · KEROSENE · OIL · WATER · WINDSCREEN

## CONNECTION SCHEME

## IN THE BOX

- MCBOX UNIT
- INSTRUCTION MANUAL

## DETAILS

SHUTTER

AGILIS SELFSERVICE MANAGEMENT

SSM AGILIS SOFTWARE

EASY ACCESS TO CONNECTION

## DIMENSIONS

### MCBOX B.SMART

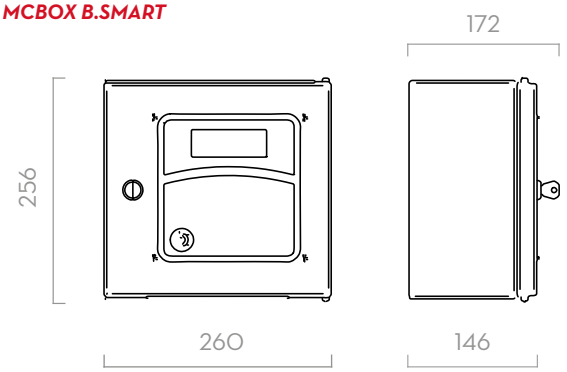


### MCBOX B.SMART COMPACT

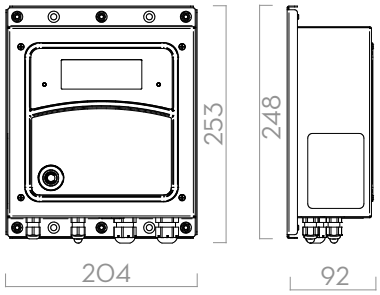


*Dimensions expressed in millimeters*

## TECHNICAL DATA

| CODE | DESCRIPTION | FLUIDS TYPE | USERS | VOLTAGE | | | SSM AGILIS SOFTWARE |
|---|---|---|---|---|---|---|---|
| | | | | AC V./HZ | POWER WATT | AMP. MAX. (load motor) | |
| F13980C00 | MCBOX 100-240V AGILIS C 80 UTENTI - COMPACT | A Ad B D F G G K O W W | 80 | 50/60 Hz | 100-240V | 15 | OPTIONAL |
| F13980000D | MCBOX 100-240V 80U AGILIS | A Ad B D F G G K O W W | 80 | 100/240 | 5 | 15 | OPTIONAL |
| F1398005C | MCBOX 100-240V 250U AGILIS | A Ad B D F G G K O W W | 250 | 100/240 | 5 | 15 | OPTIONAL |
| F13980130 | MCBOX 12V/24V 250U AGILIS | A Ad B D F G G K O W W | 250 | 12/24 | 5 | 50/25 | OPTIONAL |

# FUEL MANAGEMENT SYSTEMS ACCESSORIES

## B.SMART

| CUBE B.SMART | CODE | DESCRIPTION |
|---|---|---|
| | F22500000 | DRIVER ACCESS (X10) |
| | F00770D20 | DRIVER ACCESS (X50) |
| | F1590400A | USER KEY (YELLOW KEY: 10PCS) |
| | F1270800C | PEDESTAL |
| | F1273700A | KIT WALL SUPPORT |
| | | |

F1590400A F1270800C F1273700A

| SELF SERVICE MC B.SMART | CODE | DESCRIPTION |
|---|---|---|
| | F22500000 | DRIVER ACCESS (X10) |
| | F00770D20 | DRIVER ACCESS (X50) |
| | F1590400A | USER KEY (YELLOW KEY: 10PCS) |
| | | |

F1590400A

| MCBOX B.SMART | CODE | DESCRIPTION |
|---|---|---|
| | F22500000 | DRIVER ACCESS (X10) |
| | F00770D20 | DRIVER ACCESS (X50) |
| | F1590400A | USER KEY (YELLOW KEY: 10PCS) |
| | F1270800C | PEDESTAL |
| | F1273700A | KIT WALL SUPPORT |
| | F17121000 | LEVEL PROBE FOR ACCESS 85 |
| | | |

F1590400A F1270800C F1273700A

## SSM2.0

| CUBE MC 2.0 | CODE | DESCRIPTION |
|---|---|---|
| | F0893000A | KIT QUICK COUPLING 2IN X 1IN |
| | F1270800C | KIT PEDESTAL CUBE BLACK |
| | F1273700A | WALL KIT CUBE |
| | F1273800A | KIT PADLOCK CUBE MC |
| | F1590400A | KIT DRIVER KEY YELLOW (10PCS) |
| | F17163000 | 2" BSP DRUM CONNECTOR WITH VALVE |
| | F17299000 | KIT VEHICLE KEY BLUE (10PCS) |

F1270800C F1273700A R08930000 F17163000

F1590400A F17299000

| SELF SERVICE MC 2.0 | CODE | DESCRIPTION |
|---|---|---|
| | F1590400A | KIT DRIVER KEY YELLOW (10PCS) |
| | F17299000 | KIT VEHICLE KEY BLUE (10PCS) |

F1590400A F17299000

| SELF SERVICE FM 2.0 | CODE | DESCRIPTION |
|---|---|---|
| | F1590400A | KIT DRIVER KEY YELLOW (10PCS) |
| | F17299000 | KIT VEHICLE KEY BLUE (10PCS) |

F1590400A F17299000

## SSM2.0

| MCBOX 2.0 | CODE | DESCRIPTION |
|---|---|---|
| | F1270800C | KIT PEDESTAL CUBE BLACK |
| | F1590400A | KIT DRIVER KEY YELLOW (10PCS) |
| | F17299000 | KIT VEHICLE KEY BLUE (10PCS) |
| | F17121000 | LEVEL PROBE FOR ACCESS 85 |

F1270800C F17121000 F1590400A F17299000

## SSM AGILIS

| CUBE MC | CODE | DESCRIPTION |
|---|---|---|
| | F0893000A | KIT QUICK COUPLING 2IN X 1IN |
| | F1249600A | MANAGER KEY |
| | F1270800C | KIT PEDESTAL CUBE BLACK |
| | F1273700A | WALL KIT CUBE |
| | F1273800A | KIT PADLOCK CUBE MC |
| | F1590400A | KIT DRIVER KEY YELLOW (10PCS) |
| | F17163000 | 2" BSP DRUM CONNECTOR WITH VALVE |

F1270800C F1273700A R08930000 F17163000

F1590400A F1249600A

| SELF SERVICE MC | CODE | DESCRIPTION |
|---|---|---|
| | F1249600A | MANAGER KEY |
| | F1590400A | KIT DRIVER KEY YELLOW (10PCS) |

F1590400A F1249600A

| MCBOX | CODE | DESCRIPTION |
|---|---|---|
| | F1249600A | MANAGER KEY |
| | F1270800C | KIT PEDESTAL CUBE BLACK |
| | F1590400A | KIT DRIVER KEY YELLOW (10PCS) |
| | F1623900B | NOZZLE HOLDER SS+CABLED SWITCH FM/MC |
| | F17121000 | LEVEL PROBE FOR ACCESS 85 |

F1270800C F1590400A R1623900A F1249600A

F17121000

# DISPENSERS

# CUBE

## FEATURES

- STURDY STRUCTURE
- MECHANICAL METER
- INDUCTION THERMAL-PROTECTED MOTOR
- OVERLOAD PROTECTION
- BUILT-IN MESH FILTER
- IP 55

The PIUSI CUBE is a range of mechanical fuel transfer dispenser for non-commercial use, composed of a self-priming vane pump fitted with integrated bypass valve, automatic nozzle with swivel connection and integrated nozzle holder with start/stop pump lever. Its versatility allows different applications: on walls, on tanks, on cisterns, on drums or stand-alone (with the optional pedestal).

### PERFORMANCE

| | |
|---|---|
| UP TO 90 L/MIN<br>FLOW RATE | AC/DC VOLTAGE<br>POWER |
| ±1%<br>ACCURACY | |

CUBE 56 WITH FILTER

CUBE 56 WITH PEDESTAL (OPTIONAL)

### PACKAGING

| CODE | WEIGHT | | PACKAGING | | | N. BOXES / EUROPALLET | |
|---|---|---|---|---|---|---|---|
| | KG | LBS | MM | INCH | PCS/BOX | ✈ | 🚢 |
| F00575400 | 22 | 46 | 400X400X460 | - | 1 | 12 | 24 |
| 00057500C | 21 | 46 | 400X400X460 | - | 1 | 12 | 24 |
| F0057600C | 21 | 46 | 400X400X460 | - | 1 | 12 | 24 |
| F0057700C | 21 | 46 | 400X400X460 | - | 1 | 12 | 24 |
| F00591200 | 22 | 48 | 400X400X460 | - | 1 | 12 | 24 |
| F0059100A | 21 | 46 | 400X400X460 | - | 1 | 12 | 24 |
| F0059111A | 21 | 46 | 400X400X460 | - | 1 | 12 | 24 |
| F00592000 | 22 | 46 | 400X400X460 | - | 1 | 12 | 24 |

## CHART

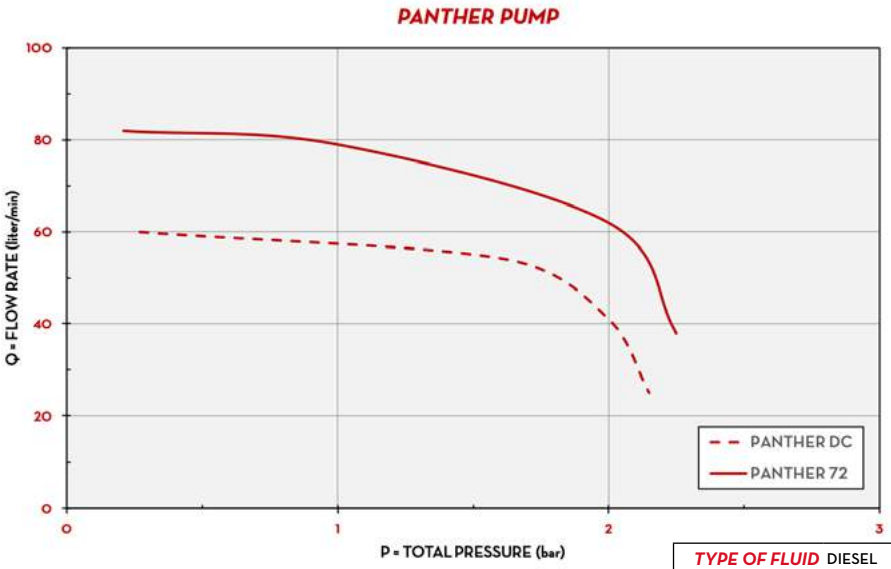


| | |
|---|---|
| TYPE OF FLUID | DIESEL |
| TEMPERATURE | +20 / -6°C |

## IN THE BOX

- CUBE DISPENSER
- AUTOMATIC NOZZLE
- DELIVERY HOSE
- INSTRUCTION MANUAL

## DETAILS

NUTATING DISK METER

K33/K44

## DIMENSIONS

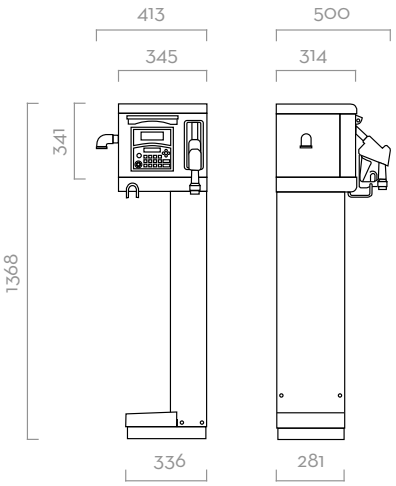


*Dimensions expressed in millimeters*

## COMPONENTS

- PUMPS:
  PANTHER AC
  PANTHER DC
- METER:
  K33 / K44
- NOZZLE:
  AUTOMATIC NOZZLE

## TECHNICAL DATA

| CODE | DESCRIPTION | FLUIDS TYPE | FLOW RATE | | VOLTAGE | | | PUMP | METER | NOZZLE | FILTER | | INLET | HOSE | |
|---|---|---|---|---|---|---|---|---|---|---|---|---|---|---|---|
| | | | L/MIN | GPM | AC V./HZ DC VOLT | POWER WATT | AMP. MAX. | TYPE | TYPE | TYPE | H2O FILTER | FILTERING CAPACITY | BSP | LENGTH | Ø |
| F00575400 | CUBE 56/33 + FILTER | D | 56 | 15 | 230/50 | 350 | 3 | PANTH 56 | K33 | A60 | YES | 30 µ | 1" | 6M | 3/4" |
| 00057500C | CUBE 56/33 | D | 56 | 15 | 230/50 | 350 | 3 | PANTH 56 | K33 | A60 | NO | - | 1" | 4M | 3/4" |
| F0057600C | CUBE 56 DC 12V | D | 56 | 15 | 12 | 300 | 35 | PANTH DC | K33 | A60 | NO | - | 1" | 4M | 1" |
| F0057700C | CUBE 70 DC 24V | D | 70 | 18 | 24 | 420 | 25 | PANTH DC | K33 | A60 | NO | - | 1" | 4M | 3/4" |
| F00591200 | CUBE 70/33 + FILTER | D | 70 | 18 | 230/50 | 500 | 4,2 | PANTH 72 | K33 | A60 | YES | 30 µ | 1" | 6M | 1" |
| F0059100A | CUBE 70/33 | D | 70 | 18 | 230/50 | 500 | 4,2 | PANTH 72 | K33 | A60 | NO | - | 1" | 4M | 1" |
| F0059111A | CUBE 70/44 PULSER | D | 70 | 18 | 230/50 | 500 | 4,2 | PANTH 72 | K44 | A60 | NO | - | 1" | 4M | 1" |
| F00592000* | CUBE 90/44 | D | 90 | 23,8 | 230/50 | 700 | 4,9 | PANTH 90 | K44 | A120 | NO | - | 1" | 4M | 1" |

UPON REQUEST IT IS AVAILABLE WITH DIFFERENT VOLTAGES AND 50/60 HZ FREQUENCY
*DUTY CYCLE 30MIN ON/OFF

# SELF SERVICE K44

## FEATURES

- ALL-IN-ONE EQUIPMENT
- WATER CAPTOR FILTER
- COMPACT DESIGN
- IP55

The PIUSI SELF SERVICE K44 is a fuel dispenser unit equipped with a high capacity vane pump, built-in bypass valve and mechanical K44 meter. Particularly suitable for all the needs of high-flow rate diesel dispensing, it guarantees that the dispensed product is free of water and impurities thanks to the integra-ted filter (column version). Available both as column or tank version, it features a front door for easy maintenance.

### PERFORMANCE

| | |
|---|---|
| UP TO 90 L/MIN<br>FLOW RATE | AC CONTINUOUS DUTY<br>POWER |
| ±1%<br>ACCURACY | |

MECHANICAL METER INTEGRATED

SELF SERVICE K44

## PACKAGING

| CODE | WEIGHT | | PACKAGING | | | N. BOXES / EUROPALLET | |
|---|---|---|---|---|---|---|---|
| | KG | LBS | MM | INCH | PCS/BOX | ✈ | 🚢 |
| **COLUMN VERSIONS** | | | | | | | |
| F0073701B | 67 | 148 | 1478X488X400 | - | 1 | 6 | 4 |
| F0074001B | 75 | 165 | 1478X488X400 | - | 1 | 6 | 4 |
| F0074002A | 75 | 165 | 1478X488X400 | - | 1 | 6 | 4 |
| **TANK VERSIONS** | | | | | | | |
| F0073B0B | 57 | 126 | 1080X488X400 | - | 1 | 6 | 4 |
| F0073B2B | 57 | 126 | 1080X488X400 | - | 1 | 6 | 4 |

## CHART

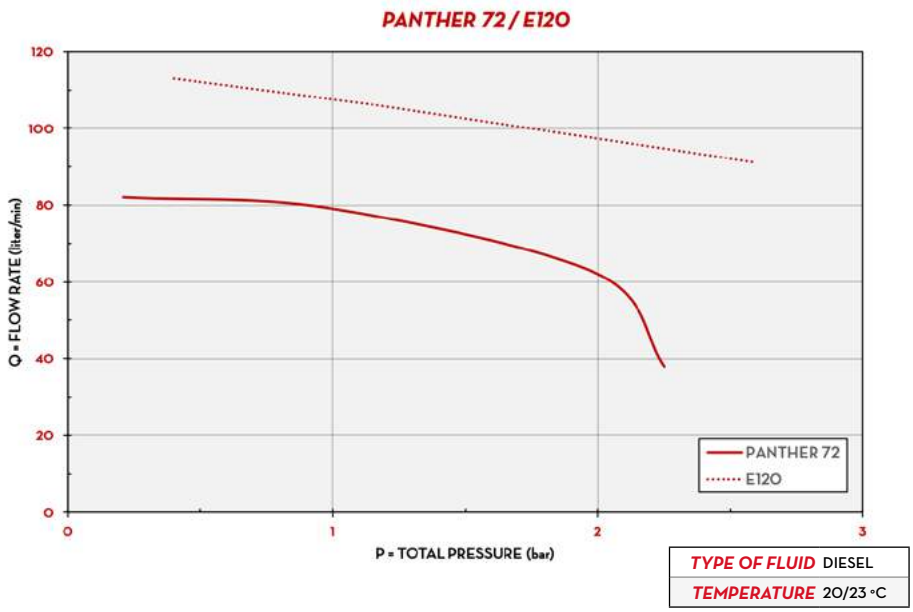


| | |
|---|---|
| TYPE OF FLUID | DIESEL |
| TEMPERATURE | 20/23 °C |

## IN THE BOX

- SELF SERVICE K44 DISPENSER
- DELIVERY HOSE
- AUTOMATIC NOZZLE
- INSTRUCTION MANUAL

## DETAILS

K44

INTEGRATED FILTER

## DIMENSIONS

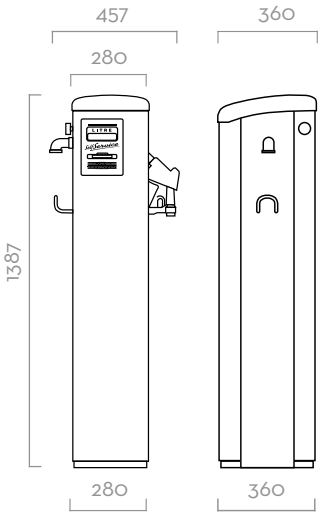


COLUMN VERSION

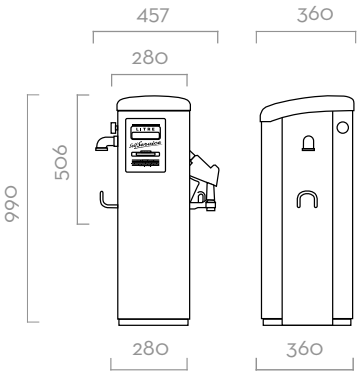


TANK VERSION

*Dimensions expressed in millimeters*

## COMPONENTS

- PUMPS:
  PANTHER AC / E120
- METERS
  K44
- NOZZLE:
  AUTOMATIC NOZZLE
- FILTER:
  WATER CAPTOR

## TECHNICAL DATA

| CODE | DESCRIPTION | FLUIDS TYPE | FLOW RATE | | VOLTAGE | | | PUMP | METER | NOZZLE | FILTER | | INLET | HOSE LENGTH | PC |
|---|---|---|---|---|---|---|---|---|---|---|---|---|---|---|---|
| | | | L/MIN | GPM | AC V./HZ DC VOLT | POWER WATT | AMP. MAX. | TYPE | TYPE | TYPE | H2O FILTER | FILTERING CAPACITY | BSP | METERS | CON-NECTION |
| **COLUMN VERSIONS** | | | | | | | | | | | | | | | |
| F0073701B | SELF SERVICE 70 K44 | D | 70 | 18 | 230/50 | 550 | 3,3 | PANTH 72 | K44 | A80 | YES | 30µ | 1" 1/2 | 4 | NO |
| F0074001B | SELF SERVICE 100 K44 | D | 90 | 24 | 230/50 | 1150 | 5,7 | E 120 | K44 | A120 | YES | 30µ | 1" 1/2 | 4 | NO |
| F0074002A | SELF SERVICE 100 K44 PULSER | D | 90 | 24 | 230/50 | 1150 | 5,7 | E 120 | K44 P | A120 | YES | 30µ | 1" 1/2 | 4 | NO |
| **TANK VERSIONS** | | | | | | | | | | | | | | | |
| F0073708B | SELF SERVICE 70 K44 TANK | D | 70 | 18 | 230/50 | 550 | 3,3 | PANTH 72 | K44 | A80 | NO | - | 1" 1/2 | 4 | NO |
| F0073702B | SELF SERVICE 70 K44 TANK PULSER | D | 70 | 18 | 230/50 | 550 | 3,3 | PANTH 72 | K44 P | A80 | NO | - | 1" 1/2 | 4 | NO |

UPON REQUEST IT IS AVAILABLE WITH DIFFERENT VOLTAGES AND 60 HZ FREQUENCY

# DISPENSERS ACCESSORIES

## MECHANICAL DISPENSER

| CUBE | CODE | DESCRIPTION |
|---|---|---|
| | F0893000A | KIT QUICK COUPLING 2IN X 1IN |
| | F1270800C | KIT PEDESTAL CUBE BLACK |
| | F1273700A | WALL KIT CUBE |
| | F1273800A | KIT PADLOCK CUBE MC |
| | F17163000 | 2" BSP DRUM CONNECTOR WITH VALVE |

F1270800C

F1273700A

R08930000

R12738000

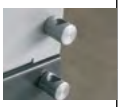

F17163000

MC
PIUSI
ON
OFF
OIL & FUEL FILTER
CF100

# KITS

# EX50 DRUM

## FEATURES

- STURDY STRUCTURE
- FLANGED COMPONENTS
- ANTI-NOISE FILTER
- THERMAL PROTECTION
- BUILT-IN BYPASS VALVE
- SUCTION PIPE WITH INTEGRATED FILTER
- UL LISTED VERSION AVAILABLE

The PIUSI EX50 DRUM is a complete pump transfer kit expressly engineered for ATEX/IECEx areas. This system is composed of a high-efficiency pump, manual or automatic nozzle and a telescopic suction hose. Thanks to the flanged components, this transfer set allows users to replace any component without using sealants thus creating maximum versatility and adaptability to any kind of condition. K33 mechanical meter available on request.

Atex II 2 G

On request

PIUSI EX50 DRUM WITH METER AND FILTER

### PERFORMANCE

| | |
|---|---|
| UP TO 50 L/MIN | 1100 MM |
| FLOW RATE | SUCTION PIPE |
| ±1% | 10µm (85%) |
| ACCURACY | FILTERING CAPACITY |

EX50 DRUM WITH AUTOMATIC NOZZLE

EX50 DRUM WITH MANUAL NOZZLE

OUR PUMPS COMPLIES WITH THE FOLLOWING MARKING ATEX/IECEx

| II | 2 | G | Ex | d | IIA | T4 | Gb |
|---|---|---|---|---|---|---|---|
| GROUP | CATEGORY | TYPE OF EXPLOSIVE ATMOSPHERE | PERMANENT PREFIX | PROTECTION METHOD | GAS GLASS | TEMPERATURE CLASS | EQUIPMENT PROTECTION LEVEL |

### PACKAGING

| CODE | WEIGHT | | PACKAGING | | |
|---|---|---|---|---|---|
| | KG | LBS | MM | INCH | PCS/BOX |
| WITHOUT METER | | | | | |
| F00372000 | 10 | 22 | 600X400X290 | 23,6X13,7X11,4 | 1 |
| F00372010 | 10 | 22 | 600X400X290 | 23,6X13,7X11,4 | 1 |
| F00372020 | 7,9 | 17,4 | 345X175X225 | - | 1 |
| WITH METER | | | | | |
| F0037500A | 12 | 22 | 600X400X290 | 23,6X13,7X11,4 | 1 |
| F0037501A | 12 | 22 | 600X400X290 | 23,6X13,7X11,4 | 1 |

ANY BIODIESEL · AIR · ANTIFREEZE · AdBlue® · BIODIESEL · DIESEL · FOOD · GASOLINE · GREASE · KEROSENE · OIL · WATER · WINDSCREEN

## CHART

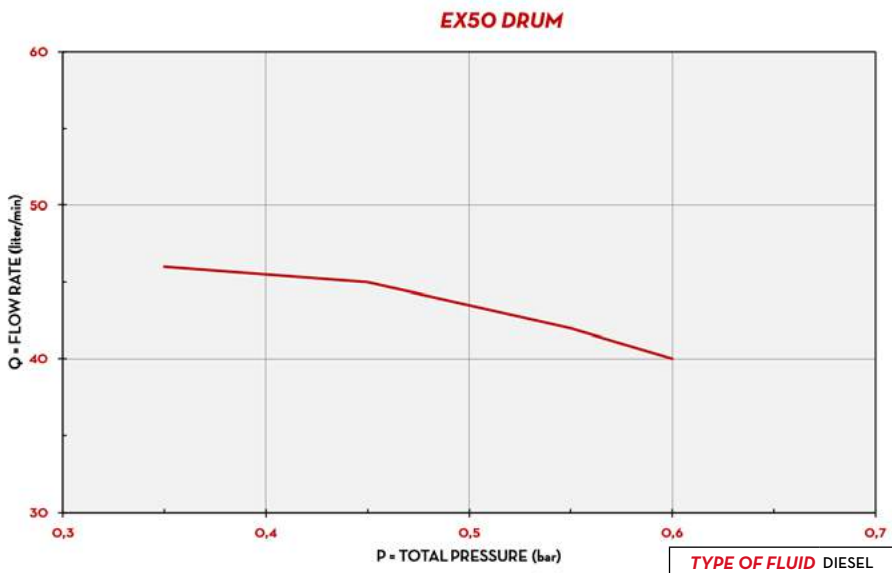


| | |
|---|---|
| TYPE OF FLUID | DIESEL |
| TEMPERATURE | 20/23°C |

## IN THE BOX

- EX50 PUMP
- TELESCOPIC SUCTION PIPE
- DELIVERY HOSE
- GASOLINE FILTER
- A60 ATEX NOZZLE
- 2" CONNECTOR
- K33 ATEX METER (ON SELECTED VERSION)
- INSTRUCTION MANUAL

## DETAILS

2" CONNECTOR

INTEGRATED FILTER

BENDING PROTECTION

## DIMENSIONS

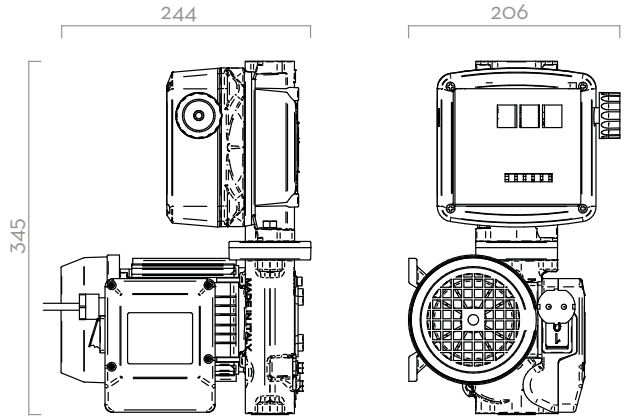


*Dimensions expressed in millimeters*

## COMPONENTS

- PUMP:
  EX50
- METER:
  K33 ATEX
- NOZZLE:
  A60 ATEX
  SELF3000
- FILTER:
  GASOLINE FILTR

## TECHNICAL DATA

| CODE | DESCRIPTION | FLUIDS TYPE | FLOW RATE | | VOLTAGE | | | METER | NOZZLE | FILTER | INLET | HOSE | |
|---|---|---|---|---|---|---|---|---|---|---|---|---|---|
| | | | L/MIN | GPM | AC V./HZ DC VOLT | POWER WATT | AMP. MAX. | TYPE | TYPE | | BSP | LENGTH MM | Ø |
| **WITHOUT METER** | | | | | | | | | | | | | |
| F00372000 | DRUM EX50 12V DC ATEX + MAN. NOZZLE | D G K | 50 | 13 | 12 | 250 | 21 | - | SELF3000 | YES | 1" | 4 | 3/4" |
| F00372010 | DRUM EX50 12V DC ATEX + AUT. NOZZLE | D G K | 50 | 13 | 12 | 250 | 21 | - | A60 | YES | 1" | 4 | 3/4" |
| F00372020 | KIT DRUM EX50 12V DC ATEX | D G K | 50 | 13 | 12 | 250 | 21 | - | NO | NO | 1" | - | - |
| **WITH METER** | | | | | | | | | | | | | |
| F0037500A | DRUM EX50 12V DC K33 ATEX + MAN. NOZZLE | D G K | 50 | 13 | 12 | 250 | 21 | K33 | SELF3000 | YES | 1" | 4 | 3/4" |
| F0037501A | DRUM EX50 12V DC K33 ATEX + AUT. NOZZLE | D G K | 50 | 13 | 12 | 250 | 21 | K33 | A60 | YES | 1" | 4 | 3/4" |

( ) UPON REQUEST IT IS AVAILABLE WITH DIFFERENT VOLTAGES AND 60 HZ FREQUENCY. COMPATIBLE FLUIDS: DIESEL, KEROSENE, PETROL, PETROL ALCOHOL MIXED MAX 15%, ASPEN 2/4

# PANTHER EX 56 DRUM

## FEATURES

- STURDY STRUCTURE
- FLANGED COMPONENTS
- HIGH FLOW RATE
- HEAVY-DUTY USE
- CONTINUOUS DUTY
- MAGNETIC SWITCH

PIUSI PANTHER EX 56 DRUM is a complete transfer kit expressly designed for ATEX/IECEx compliance. Thanks to the flanged components, this transfer kit allows the replacement of any component without the use of sealants, ensuring maximum versatility and adaptability to any type of condition.

Atex
II 2 G

IEC Ex

PANTHER EX 56 DRUM
F00582000

PANTHER EX 56 DRUM
F00582010

### PERFORMANCE

| | |
|---|---|
| UP TO 56 L/MIN | 1100 MM |
| FLOW-RATE | SUCTION PIPE |
| ±1% | 10µm (85%) |
| ACCURACY | FILTERING CAPACITY |

OUR PUMPS COMPLIES WITH THE FOLLOWING MARKING ATEX/IECEx

| II | 2 | G | Ex | d | IIA | T4 | Gb |
|---|---|---|---|---|---|---|---|
| GROUP | CATEGORY | TYPE OF EXPLOSIVE ATMOSPHERE | PERMANENT PREFIX | PROTECTION METHOD | GAS GLASS | TEMPERATURE CLASS | EQUIPMENT PROTECTION LEVEL |

### PACKAGING

| CODE | WEIGHT | | PACKAGING | | |
|---|---|---|---|---|---|
| | KG | LBS | MM | INCH | PCS/BOX |
| F00582000 | 18,3 | 40,3 | 400X240X300 | 15,7X9,4X11,8 | 1 |
| F00582010 | 21 | 46,2 | 400X240X300 | 15,7X9,4X11,8 | 1 |

## CHART

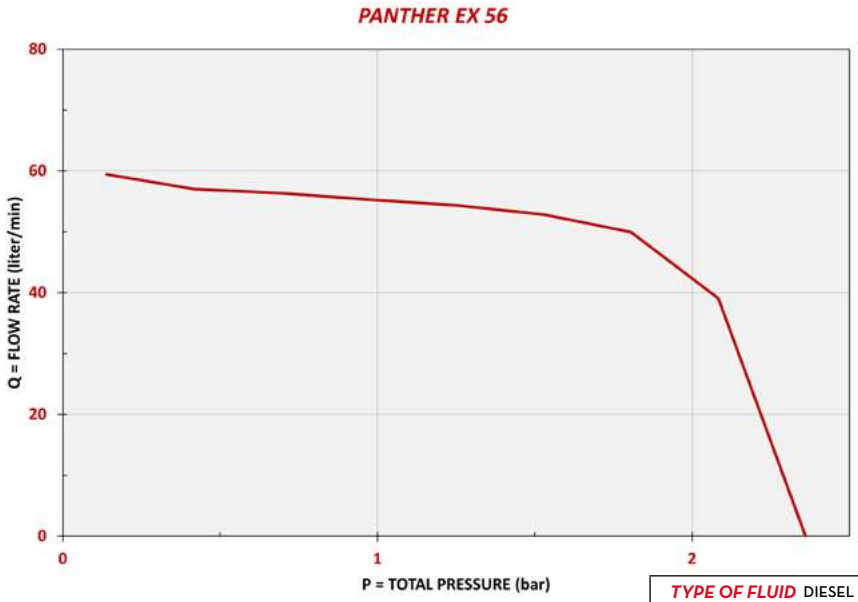


| | |
|---|---|
| TYPE OF FLUID | DIESEL |
| TEMPERATURE | 20°C |

## IN THE BOX

- TELESCOPIC SUCTION PIPE
- BUNG ADAPTER 2"
- PANTHER EX 56 PUMP
- K33 ATEX METER (ON SELECTED VERSION)
- GASOLINE FILTER E25 ATEX
- DELIVERY HOSE
- A60 ATEX AUTOMATIC NOZZLE
- INSTRUCTION MANUAL

## DETAILS

AUTOMATIC NOZZLE A60 ATEX

GASOLINE FILTER E25 ATEX

BENDING PROTECTION

TELESCOPIC PIPE

## DIMENSIONS

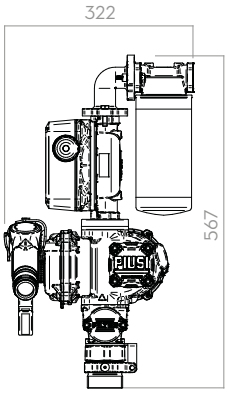


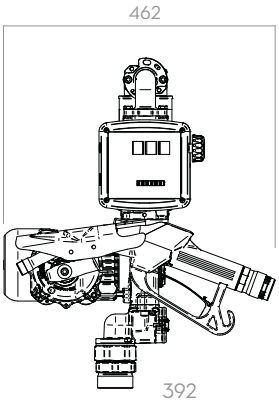


BUNG ADAPTER 2" BSP

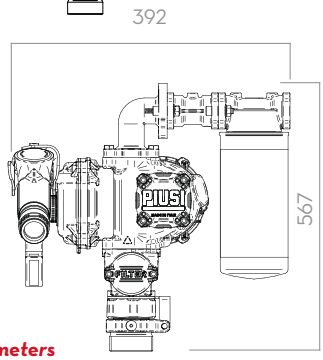


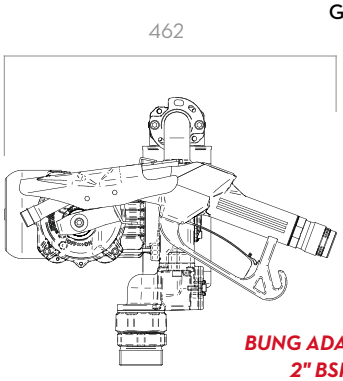


BUNG ADAPTER 2" BSP

*Dimensions expressed in millimeters*

## COMPONENTI

- PUMP:
  PANTHER EX 56
- METER:
  K33 ATEX
- AUTOMATIC NOZZLE:
  A60 ATEX
- FILTER:
  GASOLINE FILTER E25 ATEX

## TECHNICAL DATA

| CODE | DESCRIPTION | FLUIDS TYPE | FLOW RATE | | VOLTAGE | | | METER | NOZZLE | FILTER | DELIVERY HOSE | |
|---|---|---|---|---|---|---|---|---|---|---|---|---|
| | | | L/MIN | GPM | AC V/HZ | POWER WATT | AMP. MAX. | TYPE | TYPE | GASOLINE FILTER E 25 ATEX | LENGTH (M) | Ø (mm) |
| F00582000 | (EX) DRUM PANTHER EX 56 230/50 AUTO/F | D G K | 56 | 15 | 230V/50HZ | 500 | 2.3 | - | A60 ATEX | YES | 4 | 20 |
| F00582010 | (EX) DRUM PANTHER EX 56 230/50 K33 AUT/F | D G K | 56 | 15 | 230V/50HZ | 500 | 2.3 | K33 ATEX | A60 ATEX | YES | 4 | 20 |

(*) AVAILABLE WITH DIFFERENT VOLTAGES AND 60 HZ FREQUENCIES.

# EX100 DRUM

## FEATURES

- CONTINUOUS DUTY
- THERMAL PROTECTION
- SUCTION UNIT WITH INTEGRATED FILTER
- BUILT-IN BYPASS VALVE
- UL VERSION AVAILABLE

PIUSI EX100 DRUM is the new transfer kit for flammable fluids that is characterized by a high flow rate and works with a continuous duty cycle. Simple to use, compact, versatile, it adapts to any working conditions: you can use it wherever you need it most. The PIUSI EX100 DRUM is ATEX certified and complies with the directives on the use of materials in potentially explosive atmospheres.

Atex
II 2 G

On request

### PERFORMANCE

| UP TO 100 L/MIN | AC VOLTAGE |
|---|---|
| FLOW RATE | POWER |

EX100 DRUM /A140/K150/5MT

EX100 DRUM /A140/ 5MT

OUR PUMPS COMPLIES WITH THE FOLLOWING MARKING ATEX/IECEx

| II | 2 | G | Ex | d | IIA | T4 | Gb |
|---|---|---|---|---|---|---|---|
| GROUP | CATEGORY | TYPE OF EXPLOSIVE ATMOSPHERE | PERMANENT PREFIX | PROTECTION METHOD | GAS GLASS | TEMPERATURE CLASS | EQUIPMENT PROTECTION LEVEL |

### PACKAGING

| CODE | WEIGHT | | PACKAGING | | |
|---|---|---|---|---|---|
| | KG | LBS | MM | INCH | PCS/BOX |
| F00391010 | 25 | 55 | 240X400X350 | 10X16X15 | 1 |
| F00391020 | 25 | 55 | 240X400X350 | 10X16X15 | 1 |
| F00391310 | 32 | 70 | 400X600X430 | 16X24X17 | 1 |

ANY BIODIESEL AIR ANTIFREEZE AdBlue® BIODIESEL DIESEL FOOD GASOLINE GREASE KEROSENE OIL WATER WINDSCREEN

## CHART

### EX100 DRUM

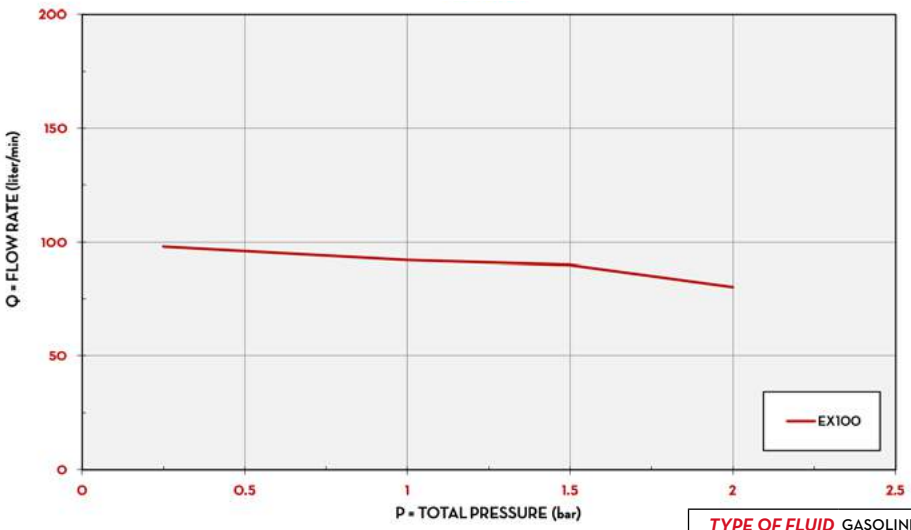


| | |
|---|---|
| TYPE OF FLUID | GASOLINE |
| TEMPERATURE | 20°C |

## IN THE BOX

- EX100 PUMP
- NOZZLE HOLDER
- 2" TANK CONNECTOR
- 90° FLANGED ELBOW
- K150 ATEX METER (ON SELECTED VERSION)
- A140 ATEX AUTOMATIC NOZZLE (ON SELECTED VERSION)
- DELIVERY HOSE (ON SELECTED VERSION)
- INSTRUCTION MANUAL

## DETAILS

MESH STRAINER

2" TANK CONNECTOR

90° FLANGED ELBOW

BENDING PROTECTION

## DIMENSIONS

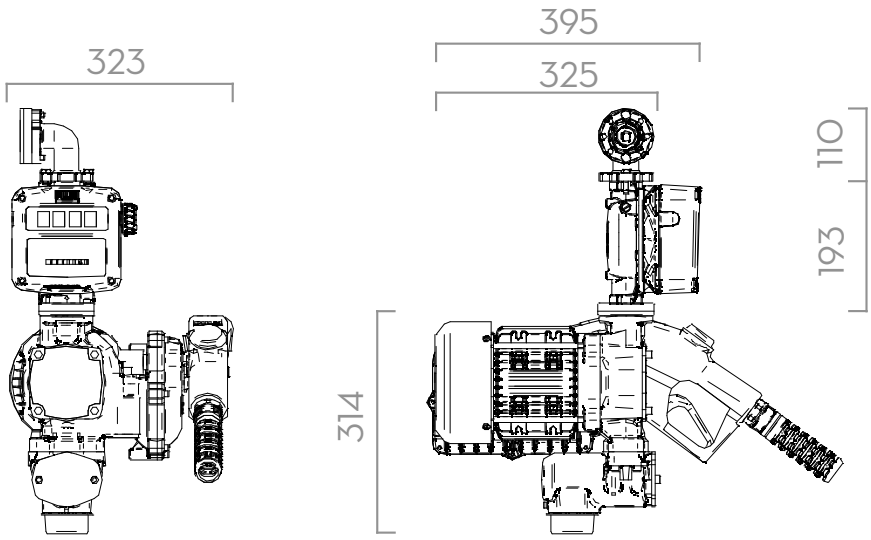


*Dimensions expressed in millimeters*

## COMPONENTS

- PUMP:
  EX100
- METER:
  K150 ATEX
- NOZZLE:
  A140 ATEX

## TECHNICAL DATA

| CODE | DESCRIPTION | FLUIDS TYPE | FLOW RATE | | VOLTAGE | | | DUTY CICLE | INLET | OUTLET | METER | DELIVERY HOSE | BENDING PRO-TECTION | ULTRA HI-FLOW AUTO NOZZLE |
|---|---|---|---|---|---|---|---|---|---|---|---|---|---|---|
| | | | L/MIN | GPM | AC V./HZ | POWER WATT | AMP. MAX. | CONTINUOUS | | | | | | |
| F00391010 | (EX) EX100 DRUM 230V/50HZ (PUMP ONLY) | D G K | 100 | 25 | 230/50 | 1035 | 4,5 | YES | 2" BSP | 1" BSP | - | - | - | - |
| F00391020 | (EX) EX100 DRUM 230V/60HZ (PUMP ONLY) | D G K | 100 | 25 | 230/60 | 874 | 3,8 | YES | 2" BSP | 1" BSP | - | - | - | - |
| F00391310 | (EX) EX100 DRUM 230/50 /A140/K150/5MT | D G K | 100 | 25 | 230/50 | 1035 | 4,5 | YES | 2" BSP | 1" BSP | K150 | D.25 5MT | YES | A140 |

( ) UPON REQUEST IT IS AVAILABLE WITH DIFFERENT VOLTAGES AND 60 HZ FREQUENCY. COMPATIBLE FLUIDS: DIESEL, KEROSENE, PETROL, PETROL ALCOHOL MIXED MAX 15%, ASPEN 2/4

# EX140 DRUM

## FEATURES

- CONTINUOUS DUTY
- THERMAL PROTECTION
- SUCTION UNIT WITH INTEGRATED FILTER
- BUILT-IN BYPASS VALVE
- UL VERSION AVAILABLE

The entire new EX line is characterized by a high flow rate that works with a continuous duty cycle, and has been designed to be particularly suitable for Heavy Duty, i.e.for those demanding fleets that need to dispense fuels such as Gasoline, diesel or kerosene quickly.
The PIUSI EX140 DRUM is ATEX certified and complies with the directives on the use of materials in potentially explosive atmospheres.

Atex II 2 G

On request

### PERFORMANCE

| UP TO 140 L/MIN | AC VOLTAGE |
|---|---|
| FLOW RATE | POWER |

EX140 DRUM /A140/K150/5MT

EX140 DRUM /A140/5MT

OUR PUMPS COMPLIES WITH THE FOLLOWING MARKING ATEX/IECEx

| II | 2 | G | Ex | d | IIA | T4 | Gb |
|---|---|---|---|---|---|---|---|
| GROUP | CATEGORY | TYPE OF EXPLOSIVE ATMOSPHERE | PERMANENT PREFIX | PROTECTION METHOD | GAS GLASS | TEMPERATURE CLASS | EQUIPMENT PROTECTION LEVEL |

### PACKAGING

| CODE | WEIGHT | | PACKAGING | | |
|---|---|---|---|---|---|
| | KG | LBS | MM | INCH | PCS/BOX |
| F00396010 | 25 | 55 | 240X400X350 | 10X16X15 | 1 |
| F00396030 | 25 | 55 | 240X400X350 | 10X16X15 | 1 |
| F00396020 | 25 | 55 | 240X400X350 | 10X16X15 | 1 |
| F00396310 | 32 | 70 | 400X600X430 | 16X24X17 | 1 |

ANY BIODIESEL | AIR | ANTIFREEZE | AdBlue® | BIODIESEL | DIESEL | FOOD | GASOLINE | GREASE | KEROSENE | OIL | WATER | WINDSCREEN

## CHART

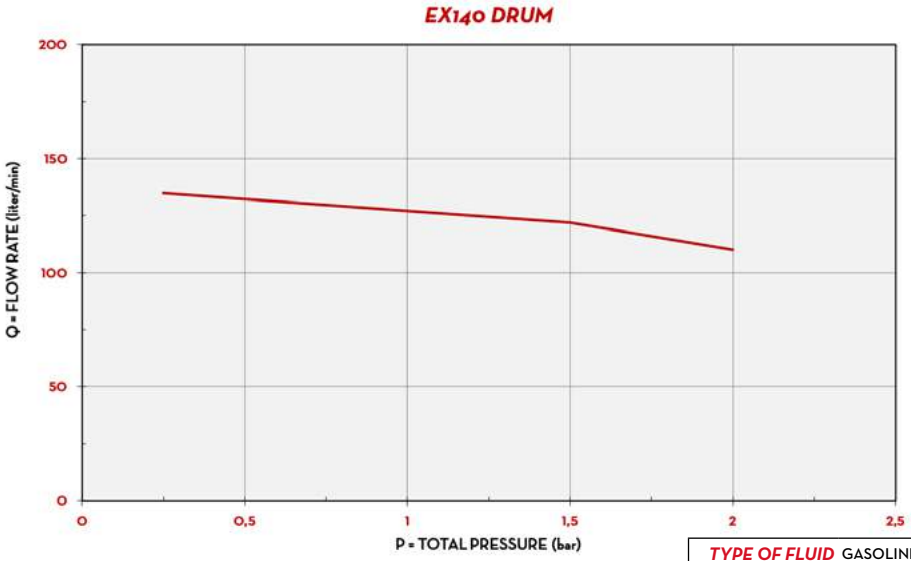


| | |
|---|---|
| TYPE OF FLUID | GASOLINE |
| TEMPERATURE | 20°C |

## IN THE BOX

- EX140 PUMP
- NOZZLE HOLDER
- 2" CONNECTOR
- 90° FLANGED ELBOW
- K150 ATEX METER (ON SELECTED VERSION)
- A140 ATEX AUTOMATIC NOZZLE (ON SELECTED VERSION)
- DELIVERY HOSE (ON SELECTED VERSION)
- INSTRUCTION MANUAL

## DETAILS

MESH STRAINER

2" TANK CONNECTOR

90° FLANGED ELBOW

BENDING PROTECTION

## DIMENSIONS

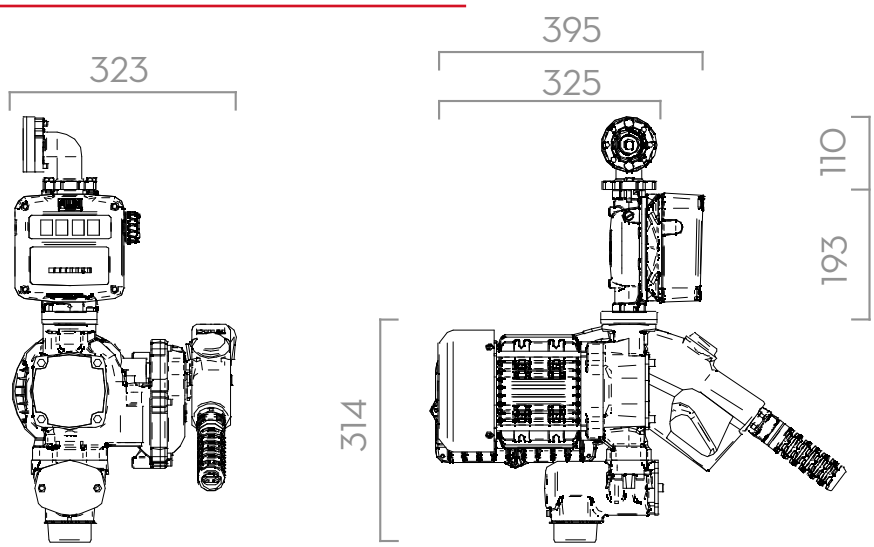


*Dimensions expressed in millimeters*

## COMPONENTS

- PUMP:
  EX140
- METER:
  K150 ATEX
- NOZZLE:
  A140 ATEX

## TECHNICAL DATA

| CODE | DESCRIPTION | FLUIDS TYPE | FLOW RATE | | VOLTAGE | | | DUTY CICLE | INLET | OUTLET | METER | DELIVERY HOSE | BENDING PRO-TECTION | ULTRA HI-FLOW AUTO NOZZLE |
|---|---|---|---|---|---|---|---|---|---|---|---|---|---|---|
| | | | L/MIN | GPM | AC V./HZ | POWER WATT | AMP. MAX. | CONTINUOUS | | | | | | |
| F00396010 | (EX) EX140 DRUM 230V/50HZ (PUMP ONLY) | D G K | 140 | 37 | 230/50 | 1150 | 5 | YES | 2" BSP | 1" BSP | - | - | - | - |
| F00396030 | (EX) EX140 DRUM 230V/60HZ (PUMP ONLY) | D G K | 140 | 37 | 230/60 | 920 | 4 | YES | 2" BSP | 1" BSP | - | - | - | - |
| F00396020 | (EX) EX140 DRUM 250V/50HZ (PUMP ONLY) | D G K | 140 | 37 | 250/50 | 1125 | 4,5 | YES | 2" BSP | 1" BSP | - | - | - | - |
| F00396310 | (EX) EX140 DRUM 230/50 /A140/K150/5MT | D G K | 140 | 37 | 230/50 | 1150 | 5 | YES | 2" BSP | 1" BSP | K150 | D.25 5MT | YES | A140 |

( ) UPON REQUEST IT IS AVAILABLE WITH DIFFERENT VOLTAGES AND 60 HZ FREQUENCY. COMPATIBLE FLUIDS: DIESEL, KEROSENE, PETROL, PETROL ALCOHOL MIXED MAX 15%, ASPEN 2/4

# ST PANTHER EX 56

## FEATURES

- STURDY STRUCTURE
- FLANGED COMPONENTS
- HIGH FLOW RATE
- HEAVY-DUTY USE
- CONTINUOUS DUTY
- MAGNETIC SWITCH

The PIUSI ST PANTHER EX 56 is a transfer station with an ATEX/IECEx certified pump, designed for the safe transfer of flammable liquids. This solution is an ideal choice for installing dispenser units on mobile or underground tanks.
The use of flanged components allows for quick and easy replacement of any part without the need for sealants, ensuring convenience and flexibility in all operational scenarios.

Atex
II 2 G

### PERFORMANCE

| | |
|---|---|
| UP TO 56 L/MIN | 10µm (85%) |
| FLOW RATE | FILTERING CAPACITY |
| ± 1% | 4MT LENGTH |
| ACCURACY | DELIVERY HOSE |

ST PANTHER EX 56, K33, A60 E GASOLINE FILTER

OUR PUMPS COMPLIES WITH THE FOLLOWING MARKING ATEX/IECEx

| II | 2 | G | Ex | d | IIA | T4 | Gb |
|---|---|---|---|---|---|---|---|
| GROUP | CATEGORY | TYPE OF EXPLOSIVE ATMOSPHERE | PERMANENT PREFIX | PROTECTION METHOD | GAS GLASS | TEMPERATURE CLASS | EQUIPMENT PROTECTION LEVEL |

### PACKAGING

| CODE | WEIGHT | | PACKAGING | | |
|---|---|---|---|---|---|
| | KG | LBS | MM | INCH | PCS/BOX |
| F00584000 | 21,6 | 47,6 | 580X400X340 | 22,8X15,7X13,3 | 1 |

ANY BIODIESEL · AIR · ANTIFREEZE · AdBlue® · BIODIESEL · DIESEL · FOOD · GASOLINE · GREASE · KEROSENE · OIL · WATER · WINDSCREEN

## HOW IT IS COMPOSED

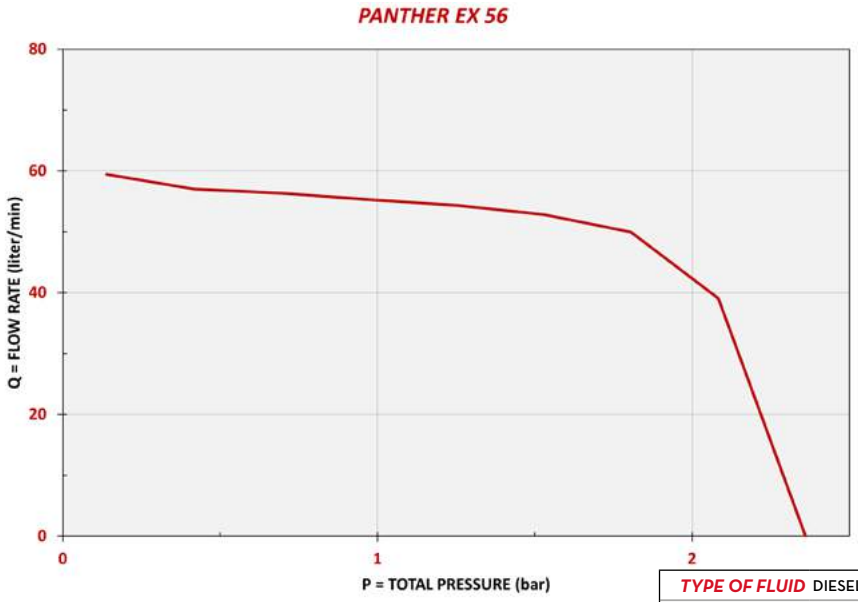


| | |
|---|---|
| TYPE OF FLUID | DIESEL |
| TEMPERATURE | 20°C |

## IN THE BOX

- INLINE FILTER
- ST PANTHER EX 56
- K33 ATEX FLOW METER
- GASOLINE FILTER E25
- DELIVERY HOSE
- AUTOMATIC NOZZLE A60 ATEX
- INSTRUCTION MANUALS

## DETAILS

NUTATING DISK SYSTEM

MESH STRAINER

NOZZLE A60 ATEX

GASOLINE FILTER E25 ATEX

## DIMENSIONS

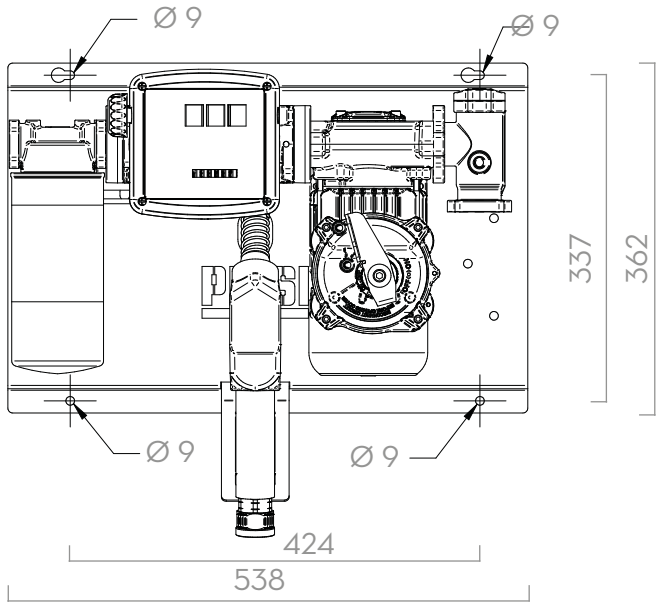


*Dimensions expressed in millimeters*

## MATERIALS

- PUMPS:
  PANTHER EX 56
- NOZZLE:
  AUTOMATIC NOZZLE A60 ATEX
- METER:
  K33
- FILTER
  GASOLINE FILTER E25

## TECHNICAL DATA

| CODE | DESCRIPTION | FLUIDS TYPE | FLOW RATE | | VOLTAGE | | | METER | NOZZLE | FILTER | DELIVERY HOSE | | INLET |
|---|---|---|---|---|---|---|---|---|---|---|---|---|---|
| | | | L/MIN | GPM | AC V./HZ | POWER. WATT | AMP. MAX. | TYPE | TYPE | GASOLINE FILTER E25 | LENGTH (M) | Ø (mm) | BSP |
| F00584000 | (EX) ST PANTHER EX 56 230/50 K33 AUTO/F | D G K | 56 | 15 | 230/50 | 500 | 2.3 | K33 ATEX | A60 ATEX | YES | 4M | 20 | 1" |

(*) AVAILABLE WITH DIFFERENT VOLTAGES AND 60 HZ FREQUENCIES.

# DRUM

## FEATURES

- EASY TO INSTALL
- SUITABLE FOR ALL DRUMS
- DIFFERENT PUMPS FOR ANY NEED
- AC/DC VERSIONS

The PIUSI DRUM is a compact fuel transfer unit suitable to be connected on drums thanks to the quick 2" coupling. Available with different pumps, the system is (always) equipped with a telescopic suction hose and the nozzle holder located above the drum, near the pump, for easy, clean and safe operations. K33 mechanical meter available on request.

### PERFORMANCE

| | |
|---|---|
| UP TO 80 L/MIN<br>FLOW RATE | AC/DC VOLTAGE<br>POWER |
| ± 1%<br>ACCURACY | |

DRUM PANTHER 56 K33

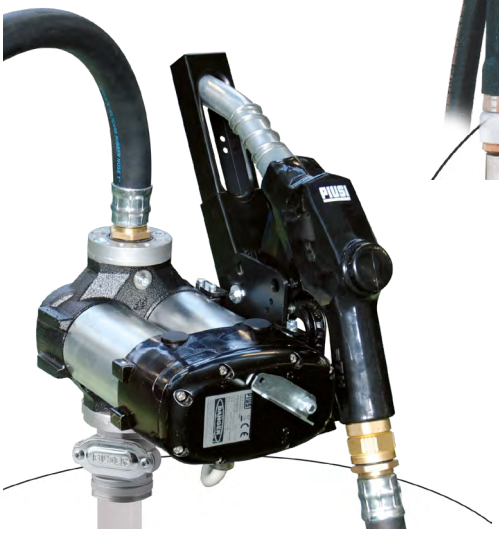

DRUM BIPUMP 12V

### PACKAGING

| CODE | | WEIGHT | | PACKAGING | | |
|---|---|---|---|---|---|---|
| WITHOUT METER | WITH METER | KG | LBS | MM | INCH | PCS/BOX |
| 000271P00 | 000272P00 | 13,5 | 29,8 | 480X370X265 | 18,3X14,6X10,4 | 1 |
| 000273P00 | 000274P00 | 14,4 | 31,7 | 480X370X265 | 18,3X14,6X10,4 | 1 |
| - | F0022205A | 20,7 | 45,6 | 480X370X265 | 18,3X14,6X10,4 | 1 |
| - | F0022206A | 20,7 | 45,6 | 480X370X265 | 18,3X14,6X10,4 | 1 |
| - | F0022207A | 21,6 | 47,6 | 480X370X265 | 18,3X14,6X10,4 | 1 |
| - | F0022208A | 21,6 | 47,6 | 480X370X265 | 18,3X14,6X10,4 | 1 |
| - | F0034111C | 14,7 | 31,7 | 480X370X265 | 18,3X14,6X10,4 | 1 |

## CHART

### PUMPS

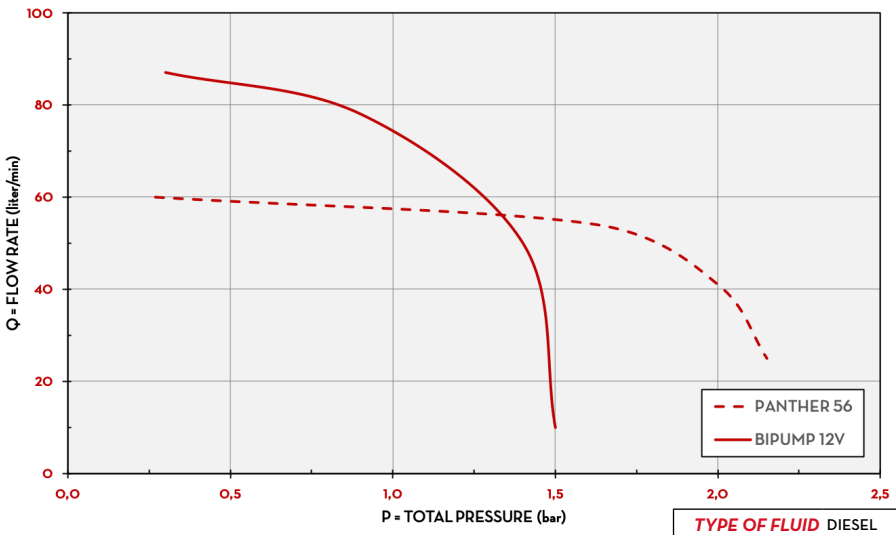


| | |
|---|---|
| TYPE OF FLUID | DIESEL |
| TEMPERATURE | 10°C |

## IN THE BOX

- PUMP
- PVC TELESCOPIC SUCTION PIPE
- DELIVERY HOSE
- NOZZLE
- 2" CONNECTOR
- K33 MECHANICAL METER (ON REQUEST)
- INSTRUCTION MANUAL

## DETAILS

2" CONNECTOR

PVC TELESCOPIC SUCTION HOSE

ELECTRIC CABLE WITH CLAMPS (ONLY DC VERSION)

## DIMENSIONS

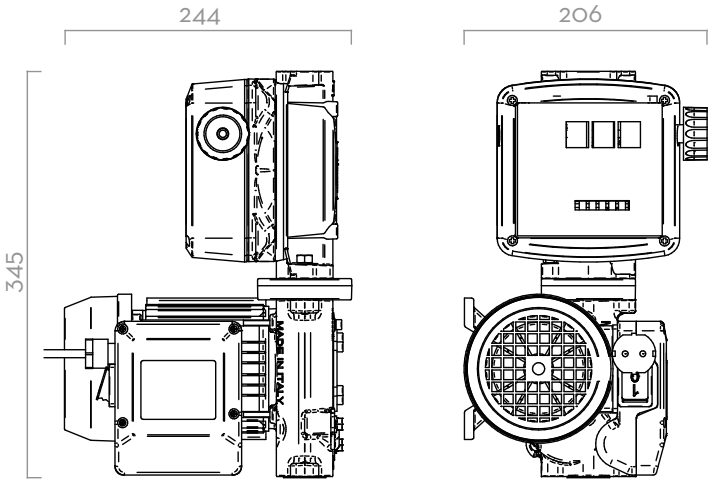


*Dimensions expressed in millimeters*

## COMPONENTS

- PUMPS:
  PANTHER AC
  BIPUMP
  PANTHER DC
- METER:
  K33

## TECHNICAL DATA

| CODE | | DESCRIPTION | FLUIDS TYPE | FLOW RATE | | VOLTAGE | | | METER | NOZZLE | INLET | HOSE |
|---|---|---|---|---|---|---|---|---|---|---|---|---|
| WITHOUT METER | WITH METER | | | L/MIN | GPM | AC V./HZ DC VOLT | POWER WATT | AMP. MAX. | TYPE | TYPE | BSP | LENGTH |
| 000271P00 | 000272P00 | DRUM PANTHER 56 | D | 56 | 15 | 230/50 | 350 | 3 | K33 | SELF2000 | 3/4" | 4M |
| 000273P00 | 000274P00 | DRUM PANTHER 56 A60 | D | 56 | 15 | 230/50 | 350 | 3 | K33 | A60 | 3/4" | 4M |
| - | F0022205A | DRUM BIPUMP 12V | D | 80 | 21 | 12V | 530 | 44 | K33 | SELF2000 | 1" | 4M |
| - | F0022206A | DRUM BIPUMP 24V | D | 80 | 21 | 24V | 540 | 22,5 | K33 | SELF2000 | 1" | 4M |
| - | F0022207A | DRUM BIPUMP 12V A120 | D | 80 | 21 | 12V | 530 | 44 | K33 | A120 | 1" | 4M |
| - | F0022208A | DRUM BIPUMP 24V A120 | D | 80 | 21 | 24V | 540 | 22,5 | K33 | A120 | 1" | 4M |
| - | F0034111C | DRUM PANTHER DC 24/12V K33 A60 | D | 56 | 15 | 24/12V | 420/150 | 25/16A | K33 | A60 | 3/4" | 4M |

# PICO

## FEATURES

- *READY TO USE*
- *WEATHER PROOF MATERIALS*
- *STURDY DESIGN*

The PIUSI PICO is a dispensing unit suitable to transfer diesel and antifreeze. It includes a centrifugal pump ready to be fit on any kind of drum (vertical installation with built-in connection). Automatic nozzle available on request.

### PERFORMANCE

| | |
|---|---|
| UP TO 35 L/MIN | AC/DC |
| FLOW RATE | VOLTAGE |
| ± 1% | |
| ACCURACY | |

### PACKAGING

| CODE | WEIGHT | | PACKAGING | | |
|---|---|---|---|---|---|
| | KG | LBS | MM | INCH | PCS/BOX |
| *WITHOUT METER* | | | | | |
| F00202000 | 4,8 | 10,6 | 360X360X180 | 14,2X14,2X7,1 | 1 |
| F00202010 | 5,8 | 12,8 | 360X360X180 | 14,2X14,2X7,1 | 1 |
| F00202040 | 4,8 | 10,6 | 360X360X180 | 14,2X14,2X7,1 | 1 |
| F00202050 | 5,8 | 12,8 | 360X360X180 | 14,2X14,2X7,1 | 1 |

ANY BIODIESEL AIR ANTIFREEZE AdBlue® BIODIESEL DIESEL FOOD GASOLINE GREASE KEROSENE OIL WATER WINDSCREEN

## CHART

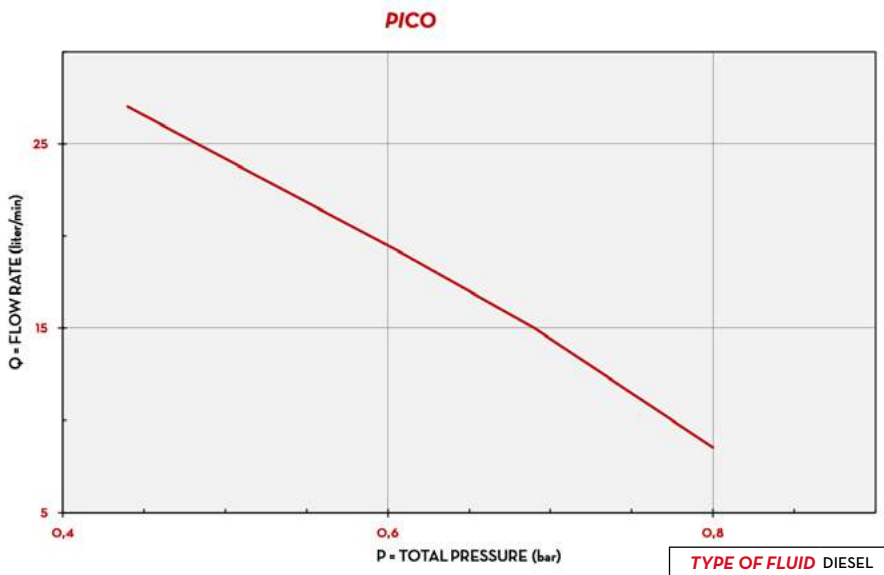


| | |
|---|---|
| TYPE OF FLUID | DIESEL |
| TEMPERATURE | 18°C |

## IN THE BOX

- PICO UNIT
- DELIVERY HOSE
- SUCTION PIPE
- MANUAL/AUTOMATIC NOZZLE
- INSTRUCTION MANUAL

## DETAILS

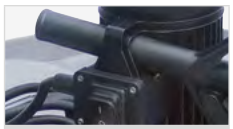
ON/OFF SWITCH

VERSION WITH METER (OPTIONAL)

ELECTRIC CABLE WITH CLAMPS (ONLY DC VERSION)

## DIMENSIONS

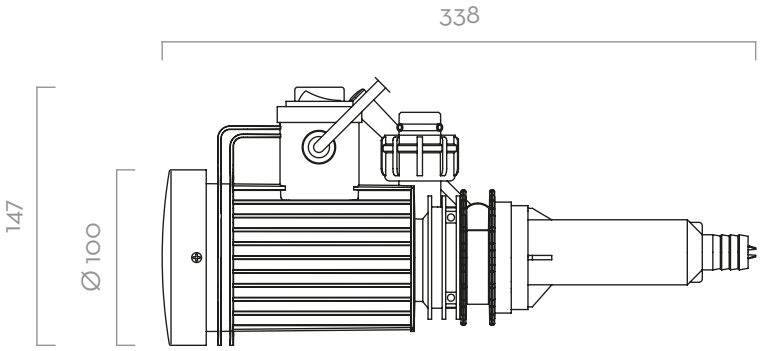


*Dimensions expressed in millimeters*

## MATERIALS

- BODY: TECHNOPOLYMER

## DATI TECNICI

| CODE | DESCRIPTION | FLUIDS TYPE | FLOW RATE | | VOLTAGE | | | PUMP | DUTY CYCLE | NOZZLE | HOSE | | FOOT FILTER |
|---|---|---|---|---|---|---|---|---|---|---|---|---|---|
| | | | L/MIN | GPM | AC V./HZ DC VOLT | POWER WATT | AMP. MAX. | TYPE | MINUTES | TYPE | LENGHT | Ø | |
| **WITHOUT METER** | | | | | | | | | | | | | |
| F00202000 | PICO 230 M | A D W | 35 | 9 | 230/50 | 224 | 1 | PICO | - | MAN. | 4M | 3/4" | YES |
| F00202010 | PICO 230 A | A D W | 30 | 8 | 230/50 | 224 | 1 | PICO | - | AUT. | 4M | 3/4" | YES |
| F00202040 | PICO 12 M | A D W | 30 | 8 | 12 | 110 | 9 | PICO | 30 | MAN. | 4M | 3/4" | YES |
| F00202050 | PICO 12 A | A D W | 25 | 7 | 12 | 110 | 9 | PICO | 30 | AUT. | 4M | 3/4" | YES |

# BATTERY KIT

## FEATURES

- *VERSATILITY*
- *MOBILE AND READY TO USE*
- *ON/OFF SWITCH*

The PIUSI BATTERY KIT is a portable transfer unit with a self-priming electric vane pump. Its modular composition allows users to have different pumps according to the required flow rates and different applications. It is equipped with a fixed brush motor with permanent magnet stator and terminal board with switches and fuses to protect against overload. It is always supplied with integrated nozzle and a set of accessories.

BIO diesel VERSION AVAILABLE

### PERFORMANCE

| | |
|---|---|
| UP TO 80 L/MIN<br>FLOW RATE | 12/24V<br>VOLTAGE |
| 30 MIN<br>DUTY CICLE | UP TO 2MT<br>SELF-PRIMING |

BATTERY KIT 3000

### PACKAGING

| CODE | WEIGHT | | PACKAGING | | | N. BOXES / EUROPALLET | |
|---|---|---|---|---|---|---|---|
| | KG | LBS | MM | INCH | PCS/BOX | ✈ | |
| **BATTERY KIT 3000** | | | | | | | |
| F0022500C | 7,8 | 17,3 | 300X300X180 | - | 1 | 50 | 100 |
| F0022600C | 7,8 | 17,3 | 300X300X180 | - | 1 | 50 | 100 |
| F0022541O | 7,8 | 17,3 | 300X300X180 | - | 1 | 50 | 100 |
| F0022638O | 7,8 | 17,3 | 300X300X180 | - | 1 | 50 | 100 |
| F0022580O | 7,8 | 17,3 | 300X300X180 | - | 1 | 50 | 100 |
| **BATTERY KIT PANTHER** | | | | | | | |
| F0034003B | 7,8 | 17,3 | 300X300X180 | - | 1 | 24 | 36 |
| F0034103C | 7,8 | 17,3 | 300X300X180 | - | 1 | 24 | 36 |
| F0034122O | 13 | 28,7 | 357X357X275 | - | 1 | 24 | 36 |
| **BATTERY KIT BIPUMP** | | | | | | | |
| F0036328O | 18 | 39,7 | 480X370X265 | - | 1 | | |

ANY BIODIESEL | AIR | ANTIFREEZE | AdBlue® | BIODIESEL | DIESEL | FOOD | GASOLINE | GREASE | KEROSENE | OIL | WATER | WINDSCREEN

BATTERY KIT BIPUMP

BATTERY KIT 3000 INLINE

BATTERY KIT PANTHER

## IN THE BOX

- PUMP
- SUCTION HOSE
- DELIVERY HOSE
- HANDLE
- NOZZLE
- MESH FILTER AND CONNECTIONS
- CABLES
- INSTRUCTION MANUAL

## DETAILS

ON/OFF SWITCH

HANDLE

ELECTRIC CABLE WITH CLAMPS

DRUM KIT AVAILABLE

## COMPONENTS

- DEPENDING ON PUMP MODEL, SEE REFERRED PAGES

## TECHNICAL DATA

| CODE | DESCRIPTION | FLUIDS TYPE | FLOW RATE | | VOLTAGE | | | FUSES CAPACITY | PUMP | DUTY CYCLE | NOZZLE | HOSE | | CHECK FILTER |
|---|---|---|---|---|---|---|---|---|---|---|---|---|---|---|
| | | | L/MIN | GPM | DC VOLT | POWER WATT | AMP. MAX. | AMPERE | TYPE | MINUTES | TYPE | LENGTH | Ø | |
| **BATTERY KIT 3000** | | | | | | | | | | | | | | |
| F0022500C | BATTERY KIT 3000 12V | D | 50 | 13 | 12 | 220 | 22 | 25 | BP3000 | 30 | SELF 2000 | 4M | 3/4" | YES |
| F0022600C | BATTERY KIT 3000 24V | D | 50 | 13 | 24 | 310 | 13 | 15 | BP3000 | 30 | SELF 2000 | 4M | 3/4" | YES |
| F0022541O | BATTERY KIT 3000 INLINE 12V | D | 50 | 13 | 12 | 220 | 22 | 25 | BP3000 | 30 | SELF 2000 | 4M | 3/4" | YES |
| F0022638O | BATTERY KIT 3000 INLINE 24V | D | 50 | 13 | 24 | 310 | 13 | 15 | BP3000 | 30 | SELF 2000 | 4M | 3/4" | YES |
| F0022580O | BATTERY KIT 3000/12V B100 | D | 50 | 13 | 12 | 220 | 22 | 25 | BP3000 BIO | 30 | SELF 2000 BIO | 4M | 3/4" | YES |
| **BATTERY KIT PANTHER** | | | | | | | | | | | | | | |
| F0034003B | BATTERY KIT PANTHER 12V | D | 56 | 15 | 12 | 300 | 35 | 40 | PANTHER DC | 30 | SELF 2000 | 4M | 3/4" | YES |
| F0034103C | BATTERY KIT PANTHER 12-24V | D | 35/70 | 9/18 | 24/12 | 420/150 | 25/16 | 30 | PANTHER DC | 30 | SELF 2000 | 4M | 3/4" | YES |
| F0034122O | BATTERY KIT PANTHER 12-24V | D | 35/70 | 9/18 | 12/24 | 600/200 | 25/16 | 30 | PANTHER DC | 30 | A60 | 5M | 3/4" | YES |
| **BATTERY KIT BIPUMP** | | | | | | | | | | | | | | |
| F0036328O | BATTERY KIT BIPUMP 12V | D | 80 | 21 | 12 | 300 | 22 | 40 | BIPUMP DC | 30 | A120 | 6M | 1" | YES |

# PITSTOP

## FEATURES

- READY TO INSTALL
- VERSATILITY
- STURDY STRUCTURE

The PIUSI PITSTOP is a dispenser unit with two DC pumps, automatic hose reel, water filter and automatic nozzle with 14 meter. hose integrated into a sturdy supporting structure. Easy to install, versatile and compact, this dispenser is the all-in-one solution for setting up a perfect mobile refueling unit.

### PERFORMANCE

| | |
|---|---|
| UP TO 45 L/MIN<br>FLOW RATE | 12/24V VOLTAGE<br>POWER |
| 14MT HOSE LENGTH<br>HOSE REEL | 200β/30µ<br>FILTERING CAPACITY |

PITSTOP

### PACKAGING

| CODE | WEIGHT | | PACKAGING | | |
|---|---|---|---|---|---|
| | KG | LBS | MM | INCH | PCS/BOX |
| F00212000 | 45 | 99 | 595X465X670 | 23,4X13,5X24,4 | 1 |
| F00213000 | 45 | 99 | 595X465X670 | 23,4X13,5X24,4 | 1 |

## CHART

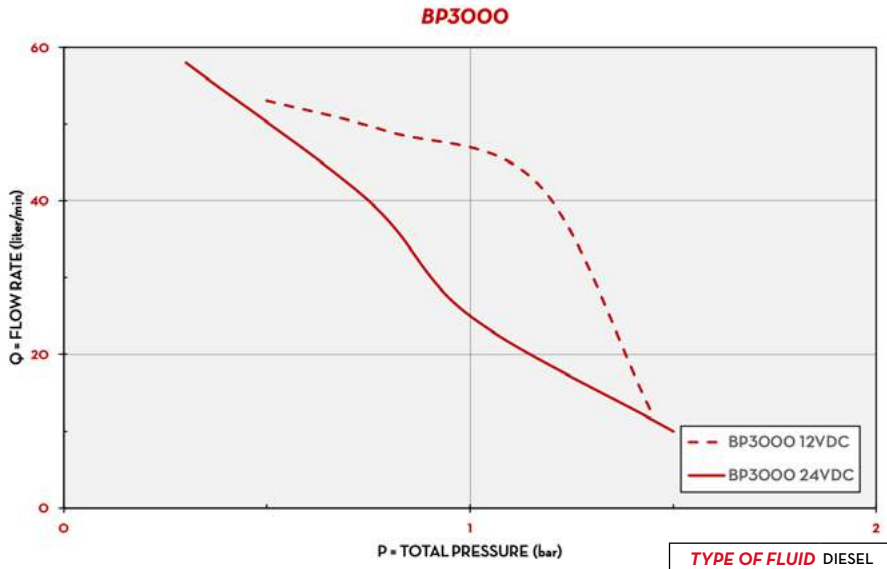


| | |
|---|---|
| TYPE OF FLUID | DIESEL |
| TEMPERATURE | 20#C |

## IN THE BOX

- PITSTOP UNIT
- AUTOMATIC NOZZLE
- FILTER
- INSTRUCTION MANUAL

## DETAILS

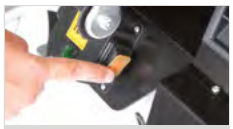
ON/OFF SWITCH

PAD LOCK

BUILT-IN DC PUMPS

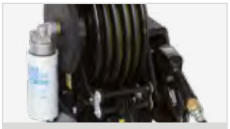
ADJUSTABLE ARM

## DIMENSIONS

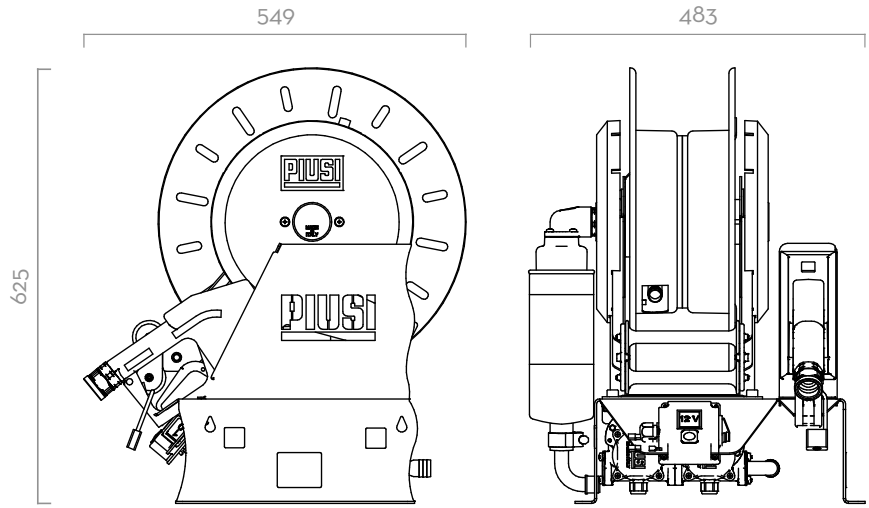


*Dimensions expressed in millimeters*

## COMPONENTS

- PUMP:
  BP3000
- FILTER:
  WATER CAPTOR
- NOZZLE:
  A60

## TECHNICAL DATA

| CODE | DESCRIPTION | FLUIDS TYPE | FLOW RATE | | VOLTAGE | | | PUMP | | DUTY CYCLE | NOZZLE | HOSE | | INLET |
|---|---|---|---|---|---|---|---|---|---|---|---|---|---|---|
| | | | L/MIN | GPM | AC V./HZ DC VOLT | POWER WATT | AMP. MAX. | TYPE | N° | MINUTES | TYPE | LENGTH | Ø | Ø |
| F00212000 | PIUSI PITSTOP DC 12V | D | 45 | 11,9 | 12 | 400 | 33 | BP 3000 | 2 | 30 | A60 | 14M | 3/4" | 1" |
| F00213000 | PIUSI PITSTOP DC 24V | D | 45 | 11,9 | 24 | 620 | 26 | BP 3000 | 2 | 30 | A60 | 14M | 3/4" | 1" |

# PIUSIBOX

## FEATURES

- SELF PRIMING PUMP
- BUILT-IN FILTER (PRO VERSION)
- EASY TO REPACK
- IP55

The PIUSIBOX is a portable fuel dispenser integrated with a self-priming transfer pump, filter, check valve and manual nozzle. Suitable for quick and safe refuel operations in all the situations where an easy mobile refueling solution is required.

### PERFORMANCE

| | |
|---|---|
| UP TO 45 L/MIN | 12/24V VOLTAGE |
| FLOW RATE | POWER |
| 30 MIN | |
| DUTY CICLE | |

PIUSIBOX

### PACKAGING

| CODE | WEIGHT | | PACKAGING | | | N. BOXES / EUROPALLET | |
|---|---|---|---|---|---|---|---|
| | KG | LBS | MM | INCH | PCS/BOX | ✈ | 🚢 |
| F0023100B | 9,5 | 20,9 | 400X300X420 | - | 1 | 24 | 32 |
| F0023101B | 12 | 26,5 | 400X300X420 | - | 1 | 24 | 32 |
| F0023200B | 9,5 | 20,9 | 400X300X420 | - | 1 | 24 | 32 |
| F0023201B | 12 | 26,5 | 400X300X420 | - | 1 | 24 | 32 |

## CHART

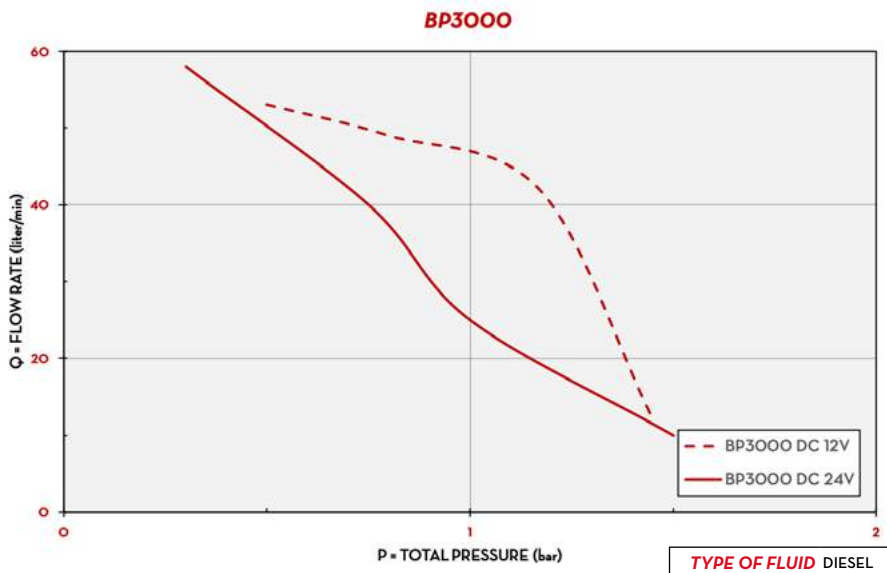


| | |
|---|---|
| TYPE OF FLUID | DIESEL |
| TEMPERATURE | 20°C |

## IN THE BOX

- PIUSIBOX UNIT
- SUCTION&DELIVERY HOSE
- OIL&FUEL FILTER (PRO VERSION)
- CHECK VALVE
- INSTRUCTION MANUAL

## DETAILS

CHECK VALVE

ERGONOMIC HANDLE

ROTATING CONNECTION

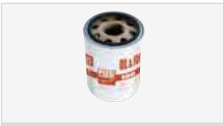
CARTRIDGE

## DIMENSIONS

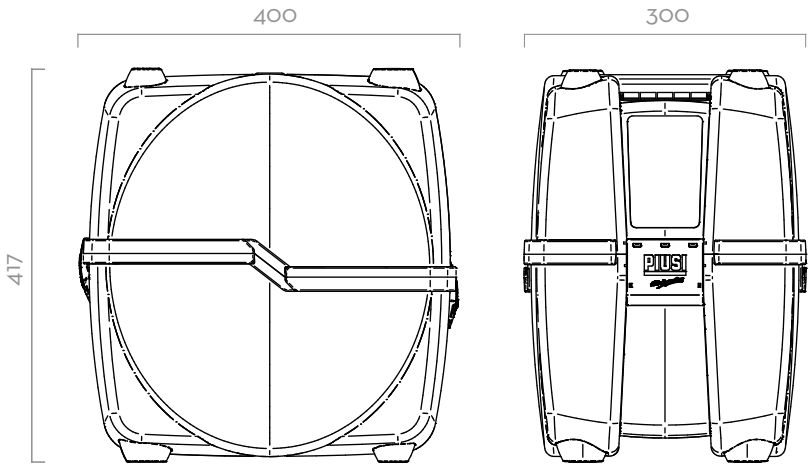


*Dimensions expressed in millimeters*

## MATERIALS

- BODY: CAST IRON
- ROTOR: SINTERED STEEL
- VANES: ACETAL RESIN
- SEAL: NBR
- SHAFT: STEEL

## TECHNICAL DATA

| CODE | DESCRIPTION | FLUIDS TYPE | FLOW RATE | | VOLTAGE | | | PUMP | DUTY CYCLE | FILTER | CARTRI-DGE | NOZZLE | DELIVERY HOSE 5/8" | SUCTION HOSE 3/4" | FOOT VALVE |
|---|---|---|---|---|---|---|---|---|---|---|---|---|---|---|---|
| | | | L/MIN | GPM | AC V./HZ DC VOLT | POWER WATT | AMP. MAX. | TYPE | MINUTES | | | TYPE | | | MOD. VANTAGE |
| F0023100B | PIUSIBOX 12V BASIC | D | 45 | 11,9 | 12 | 260 | 22 | BP 3000 | 30 | NO | NO | MAN. | 4M | 2M | YES |
| F0023101B | PIUSIBOX 12V PRO | D | 43 | 11,7 | 12 | 260 | 22 | BP 3000 | 30 | YES | 10µ | MAN. | 4M | 2M | YES |
| F0023200B | PIUSIBOX 24V BASIC | D | 45 | 11,9 | 24 | 310 | 12 | BP 3000 | 30 | NO | NO | MAN. | 4M | 2M | YES |
| F0023201B | PIUSIBOX 24V PRO | D | 43 | 11,7 | 24 | 310 | 12 | BP 3000 | 30 | YES | 10µ | MAN. | 4M | 2M | YES |

# CARRY

## FEATURES

- EASY TO INSTALL
- SAFE TO MOVE
- LONG LASTING APPLICATION

The PIUSI CARRY pump is a diesel transfer DC pump designed to meet the needs of those who are looking for a long-lasting, high quality and portable pump. CARRY 3000 is equipped with a sturdy handle to allow easy carriage and comes complete with dispensing pipe, power cables and the dispensing nozzle.

### PERFORMANCE

| | |
|---|---|
| UP TO 70 L/MIN<br>FLOW RATE | 12/24V VOLTAGE<br>POWER |
| 30 MIN<br>DUTY CICLE | |

CARRY PANTHER

CARRY

CARRY 3000 INLINE

### PACKAGING

| CODE | WEIGHT | | PACKAGING | | | N. BOXES / EUROPALLET | |
|---|---|---|---|---|---|---|---|
| | KG | LBS | MM | INCH | PCS/BOX | ✈ | 🚢 |
| F0022300C | 4,2 | 9,3 | 260X235X164 | - | 1 | 84 | 120 |
| F0022400C | 4,2 | 9,3 | 260X235X164 | - | 1 | 84 | 120 |
| F0022326O | 4,2 | 9,3 | 260X235X164 | - | 1 | 84 | 120 |
| F0022424O | 4,2 | 9,3 | 260X235X164 | - | 1 | 84 | 120 |
| F0034004B | 4,2 | 9,3 | 260X235X164 | - | 1 | 84 | 120 |
| F0034104C | 4,2 | 9,3 | 260X235X164 | - | 1 | 84 | 120 |

## CHART

| | |
|---|---|
| TYPE OF FLUID | DIESEL |
| TEMPERATURE | 20-22°C |

## IN THE BOX

- CARRY PUMP
- HANDLE
- ELECTRIC CABLE WITH CLAMPS
- CONNECTIONS
- INSTRUCTION MANUAL

## DETAILS

STURDY HANDLE

ELECTRIC CABLE WITH CLAMPS

## DIMENSIONS

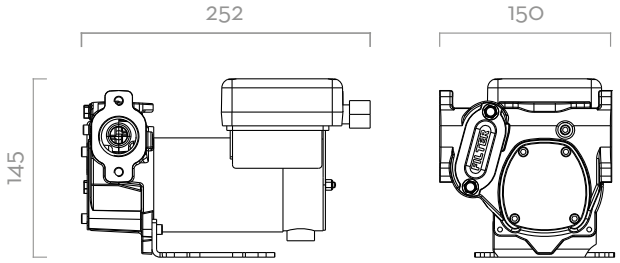


CARRY PANTHER

## MATERIALS

- BODY: CAST IRON
- ROTOR: SINTERED STEEL
- VANES: ACETAL RESIN
- SEAL: NBR
- SHAFT: STEEL

in particolare, dai dati tecnici a SAP risulta:
F00224240 CARRY 3000 24V LINEA - ¾ BSP assorbimento 13A/6A
F0034004B CARRY PANTHER DC 12V assorbimento 35Amp
F0034104C CARRY PANTHER DC 24/12V assorbimento 25A/16 A

## TECHNICAL DATA

| CODE | DESCRIPTION | FLUIDS TYPE | FLOW RATE | | VOLTAGE | | | FUSES CAPACITY | DUTY CICLE | RPM | PRESSURE MAX | ON/OFF SWITCH | INLET/OUTLET |
|---|---|---|---|---|---|---|---|---|---|---|---|---|---|
| | | | L/MIN | GPM | DC VOLT | POWER WATT | AMP. MAX. | AMPERE | MINUTES | | BAR | | BSP |
| F0022300C | CARRY 3000 12V | D | 50 | 13 | 12 | 300 | 24A | 25 | 30 | 2900 | 1,5 | YES | 3/4" |
| F0022400C | CARRY 3000 24V / 12V | D | 50/30 | 13/6 | 24/12 | 310/80 | 13A/6,5A | 15 | 30 | 2900/1500 | 1,5 | YES | 3/4" |
| F0022326O | CARRY 3000 INLINE 12V | D | 50 | 13 | 12 | 300 | 24A | 25 | 30 | 2900 | 1,5 | YES | 3/4" |
| F0022424O | CARRY 3000 INLINE 24V | D | 50/30 | 13/6 | 24/12 | 310/80 | 13A/6A | 15 | 30 | 2900/1500 | 1,5 | YES | 3/4" |
| F0034004B | CARRY PANTHER 12V | D | 56 | 15 | 12 | 420 | 35A | 40 | 30 | 2900 | 4 | YES | 1" |
| F0034104C | CARRY PANTHER 12V / 24V | D | 35/70 | 9/18 | 24/12 | 600/200 | 25A/16A | 30 | 30 | 3500/1800 | 4 | YES | 1" |

# ST

## FEATURES

- RADY TO USE
- EASY TO INSTALL
- STURDY STRUCTURE
- COMPACT DEISGN
- AVAILABLE WITH DIFFERENT PUMPS

The PIUSI ST is a versatile and compact diesel transfer station that can be used to fill mobile tanks or interact with distribution units. It is fitted with check valve, filter, nozzle and 4mt delivery hose. Its sturdy structure makes this dispenser suitable to be used in the harshest environments. It can be integrated with a protective metal box and water separating filter.

### PERFORMANCE

| | |
|---|---|
| UP TO 90 L/MIN<br>FLOW RATE | AC/DC VOLTAGE<br>POWER |
| 4MT LENGTH<br>DELIVERY HOSE | |

ST

### PACKAGING

| CODE | WEIGHT | | PACKAGING | | |
|---|---|---|---|---|---|
| | KG | LBS | MM | INCH | PCS/BOX |
| 000266P00 | 16 | 35 | 357X357X275 | 14,1X14,1X10,8 | 1 |
| 000286P00 | 16 | 35 | 357X357X275 | 14,1X14,1X10,8 | 1 |
| 000266P20 | 21 | 46 | 357X357X275 | 14,1X14,1X10,8 | 1 |
| 000214000 | 21 | 46 | 357X357X275 | 14,2X14,2X11,8 | 1 |
| 000216000 | 23 | 50 | 480X370X265 | 18,9X14,6X10,4 | 1 |
| F0021000B | 10 | 22 | 357X357X275 | 14,1X14,1X10,8 | 1 |
| F0021100B | 10 | 22 | 357X357X275 | 14,1X14,1X10,8 | 1 |
| F00340080 | 19 | 42 | 357X357X275 | 14,1X14,1X10,8 | 1 |

## AVAILABLE WITH DIFFERENT PUMPS

AC PUMP - PANTHER

AC PUMP - E80

AC PUMP - E120

AC PUMP - VISCOMAT VANE

DC PUMP - BP3000

DC PUMP - PANTHER DC

## IN THE BOX

- ST UNIT
- DELIVERY HOSE
- NOZZLE
- NOZZLE HOLDER
- INSTRUCTION MANUAL

## DETAILS

MANUAL NOZZLE

AUTOMATIC NOZZLE

## DIMENSIONS

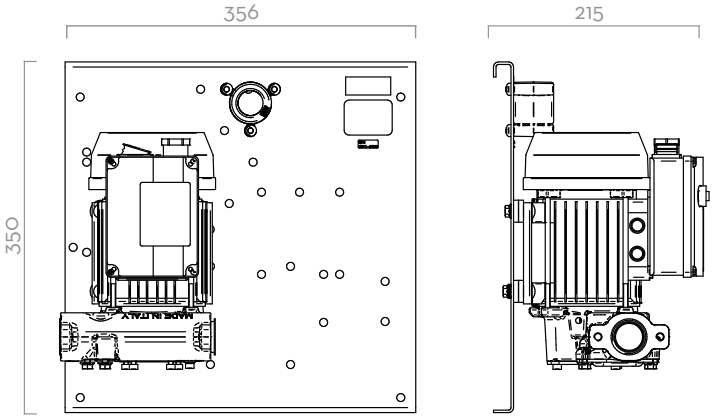


*Dimensions expressed in millimeters*

## COMPONENTS

- PUMPS:
  PANTHER AC
  E80/E120
  VISCOMAT VANE
  BP3000
  PANTHER DC
- NOZZLE:
  MANUAL NOZZLE
  AUTOMATIC NOZZLE

## TECHNICAL DATA

| CODE | DESCRIPTION | FLUIDS TYPE | FLOW RATE | | VOLTAGE | | | METER | NOZZLE | FILTER | DELIVERY HOSE | | OUTLET |
|---|---|---|---|---|---|---|---|---|---|---|---|---|---|
| | | | L/MIN | GPM | AC V./HZ DC VOLT | POWER WATT | AMP. MAX. | TYPE | TYPE | TYPE | LENGTH | Ø | bsp |
| 000266P00 | ST PANTHER 56 | D | 56 | 15 | 230/50 | 350 | 3 | NO | SELF 3000 | NO | 4M | 3/4" | 1" |
| 000286P00 | ST PANTHER 56 A60 | D | 56 | 15 | 230/50 | 350 | 3 | NO | A60 | NO | 4M | 3/4" | 1" |
| 000266P20 | ST PANTHER 72/M | D | 72 | 19 | 230/50 | 500 | 4,2 | NO | SELF 3000 | NO | 4M | 3/4" | 1" |
| 000214000 | ST E 80 | D | 80 | 21 | 230/50 | 700 | 3,5 | NO | SELF 3000 | NO | 4M | 1" | 1" |
| 000216000 | ST E 120 | D | 90 | 24 | 230/50 | 1150 | 5,7 | NO | SELF 3000 | NO | 4M | 1" | 1" |
| F0021000B | ST BYPASS 3000 12V | D | 42 | 11 | 12 | 260 | 22 | NO | SELF 3000 | NO | 4M | 3/4" | 1" |
| F0021100B | ST BYPASS 3000 24V | D | 42 | 11 | 24 | 300 | 12 | NO | SELF 3000 | NO | 4M | 3/4" | 1" |
| F00340080 | ST PANTHER DC 12V | D | 56 | 15 | 12 | 420 | 35 | NO | SELF 3000 | NO | 4M | 3/4" | 1" |

THE UNIT CAN ALSO BE SUPPLIED FOR OPERATING UNDER DIFFERENT VOLTAGES AND WITHOUT METER.

# ST WITH METER

## FEATURES

- READY TO USE
- EASY TO INSTALL
- STURDY STRUCTURE
- HIGH PRECISION METER
- AVAILABLE WITH DIFFERENT PUMPS

The PIUSI ST WITH METER is a diesel transfer station for fixed installations composed by AC or DC pump, nozzle (manual or automatic) and precision meter - both mechanical (K33) or electronic (K600 B/3) - for safe and controlled refueling operations. Easy to install, this station can be used to fill mobile tanks or interact with distribution units.

METALLIC BOX (optional)

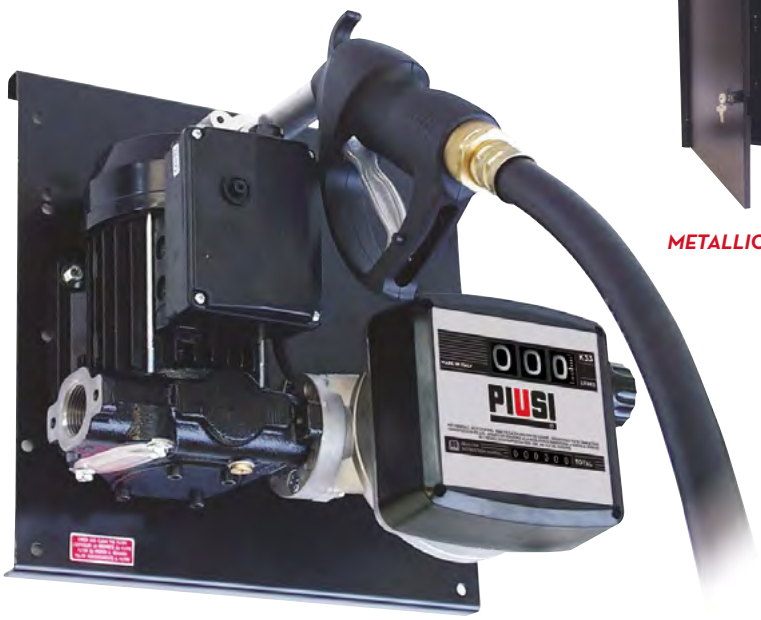


ST WITH METER

### PERFORMANCE

| | |
|---|---|
| UP TO 90 L/MIN<br>FLOW RATE | AC/DC VOLTAGE<br>POWER |
| ± 1%<br>ACCURACY | 4MT LENGTH<br>DELIVERY HOSE |

### PACKAGING

| CODE | WEIGHT | | PACKAGING | | |
|---|---|---|---|---|---|
| WITHOUT METAL BOX | KG | LBS | MM | INCH | PCS/BOX |
| F00385P0A | 16 | 35 | 357X357X275 | 14,1X14,1X10,8 | 1 |
| F00287P0A | 16 | 35 | 357X357X275 | 14,1X14,1X10,8 | 1 |
| 000390000 | 21 | 46 | 357X357X275 | 14,1X14,1X10,8 | 1 |
| 000392000 | 23 | 50 | 357X357X275 | 14,2X14,2X11,8 | 1 |
| 000395000 | 23 | 50 | 480X370X265 | 18,9X14,6X10,4 | 1 |
| 000395050 | 24 | 53 | 480X370X275 | 18,9X14,6X11,8 | 1 |
| 000397000 | 20 | 44 | 480X370X265 | 18,9X14,6X10,4 | 1 |
| 000287P40 | 19 | 41 | 357X357X275 | 14,1X14,1X10,8 | 1 |
| F0023500B | 13 | 29 | 357X357X275 | 14,1X14,1X10,8 | 1 |
| F0023600B | 13 | 29 | 357X357X275 | 14,2X14,2X11,8 | 1 |
| F0023300B | 14 | 31 | 480X370X265 | 18,9X14,6X10,4 | 1 |
| F0023400B | 14 | 31 | 480X370X265 | 18,9X14,6X10,4 | 1 |
| F0024000A | 24 | 53 | 357X357X275 | 14,1X14,1X10,8 | 1 |
| F0024003A | 24 | 53 | 357X357X275 | 14,1X14,1X10,8 | 1 |
| F0024100A | 24 | 53 | 357X357X275 | 14,1X14,1X10,8 | 1 |
| F0024101A | 11 | 11 | 357X357X275 | 14,1X14,1X10,8 | 1 |
| F00340070 | 17 | 37 | 357X357X275 | 14,1X14,1X10,8 | 1 |
| F00340160 | 17 | 11 | 357X357X275 | 14,1X14,1X10,8 | 1 |

## AVAILABLE WITH DIFFERENT PUMPS

AC PUMP - PANTHER 56/72

AC PUMP - E80/E120

AC PUMP - VISCOMAT 70/90

DC PUMP - BYPASS 3000

DC PUMP - PANTHER DC

DC PUMP - BIPUMP

## IN THE BOX

- ST WITH METER UNIT
- METER
- DELIVERY HOSE
- NOZZLE
- NOZZLE HOLDER
- INSTRUCTION MANUAL

## DETAILS

K33 / K600 B/3

MAN. / AUTOM. NOZZLE

## DIMENSIONS

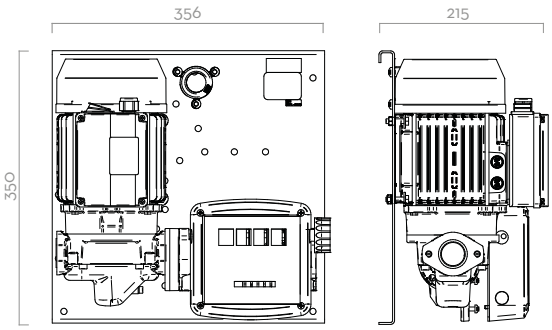


*Dimensions expressed in millimeters*

## COMPONENTS

- PUMPS:
  PANTHER AC
  E80/E120
  VISCOMAT VANE
  BP3000
  PANTHER DC
  BIPUMP
- NOZZLE:
  MANUAL NOZZLE
  AUTOMATIC NOZZLE
- METERS:
  K33
  K600 B/3

## TECHNICAL DATA

| CODE | DESCRIPTION | FLUIDS TYPE | FLOW RATE | | VOLTAGE | | | METER | NOZZLE | SUCTION HOSE | HOSE | | OUTLET |
|---|---|---|---|---|---|---|---|---|---|---|---|---|---|
| | | | L/MIN | GPM | AC V./HZ DC VOLT | POWER WATT | AMP. MAX. | TYPE | TYPE | | LENGTH (M) | Ø (MM) | bsp |
| F00385P0A | ST PANTHER 56 K33 | D | 56 | 15 | 230/50 | 350 | 3 | K33 | SELF 3000 | NO | 4 | 20 | 3/4" |
| F00287P0A | ST PANTHER 56 K33 A60 | D | 56 | 15 | 230/50 | 350 | 3 | K33 | A60 | NO | 4 | 20 | 3/4" |
| 000390000 | ST E80 K33 | D | 80 | 21 | 230/50 | 700 | 3,5 | K33 | SELF 3000 | NO | 4 | 25 | 1" |
| 000392000 | ST E80 K33 A80 | D | 75 | 20 | 230/50 | 700 | 3,5 | K33 | A80 | NO | 4 | 25 | 1" |
| 000395000 | ST E120 K33 | D | 90 | 24 | 230/50 | 1150 | 5,7 | K33 | SELF 3000 | NO | 4 | 25 | 1" |
| 000395050 | ST E120/M K44 | D | 90 | 24 | 230/50 | 1150 | 5,7 | K44 | SELF 3000 | NO | 4 | 25 | 1" |
| 000397000 | ST E120 K33 A120 | D | 90 | 24 | 230/50 | 1150 | 5,7 | K33 | A120 | NO | 4 | 25 | 1" |
| 000287P40 | ST PANTHER 72/M K33 A80 | D | 72 | 19 | 230/50 | 500 | 4,2 | K33 | A80 | NO | 4 | 25 | 1" |
| F0023500B | ST BYPASS 3000/12V K33 | D | 40 | 10 | 12 | 260 | 22 | K33 | SELF 3000 | NO | 4 | 20 | 3/4" |
| F0023600B | ST BYPASS 3000 INLINE 24V K33 | D | 40 | 10 | 24 | 300 | 12 | K33 | SELF 3000 | NO | 4 | 20 | 3/4" |
| F0023300B | ST BYPASS 3000/12V K33 A60 | D | 35 | 9 | 12 | 260 | 22 | K33 | A60 | NO | 4 | 20 | 3/4" |
| F0023400B | ST BYPASS 3000 INLINE 24V K33 A60 | D | 35 | 9 | 24 | 300 | 12 | K33 | A60 | NO | 4 | 20 | 3/4" |
| F0024000A | ST BIPUMP 12V K33 SELF 3000 | D | 80 | 21 | 12 | 530 | 44 | K33 | SELF 3000 | NO | 4 | 25 | 1" |
| F0024003A | ST BIPUMP 12V K33 A120 | D | 80 | 21 | 12 | 530 | 44 | K33 | A120 | NO | 4 | 25 | 1" |
| F0024100A | ST BIPUMP 24V K33 SELF 3000 | D | 80 | 21 | 24 | 540 | 22,5 | K33 | SELF 3000 | NO | 4 | 25 | 1" |
| F0024101A | ST BIPUMP 24V K33 A120 | D | 80 | 21 | 24 | 540 | 22,5 | K33 | A120 | NO | 4 | 25 | 1" |
| F00340070 | ST PANTHER 12V K33 A60 | D | 56 | 15 | 12 | 420 | 35 | K33 | A60 | NO | 4 | 20 | 3/4" |
| F00340160 | ST PANTHER DC 12/24V K33 A60 | D | 70/35 | 18,5/9,2 | 24/12 | 420/150 | 25/16 | K33 | A60 | NO | 4 | 20 | 3/4" |

# ST WITH METER AND FILTER

## FEATURES

- READY TO USE
- VERSATILE
- EASY TO INSTALL
- COMPACT DESIGN
- FILTRATION GUARANTEED
- AVAILABLE WITH DIFFERENT PUMPS

PIUSI ST WITH METER AND FILTER is a range of dispensers particularly suited for all applications in which a filtration is required. The stations integrate PIUSI CLEAR or WATER CAPTOR FILTERS and are available with mechanical meter K33 or electronic meter K24/K600 B/3. They come with integrated check valve and 4-meter delivery hose.

ST PANTHER 56, K33, A60 E WATER CAPTOR

ST PANTHER 56, K33, A60 E CLEAR CAPTOR

ST PANTHER 72 BIO, K33 BIO, A70 BIO AND FILTER BIODIESEL

BIO diesel VERSION AVAILABLE

### PERFORMANCE

| | |
|---|---|
| UP TO 90 L/MIN — FLOW RATE | AC CONTINUOUS DUTY — POWER |
| ± 1% — ACCURACY | UP TO 6MT LENGTH — DELIVERY HOSE |

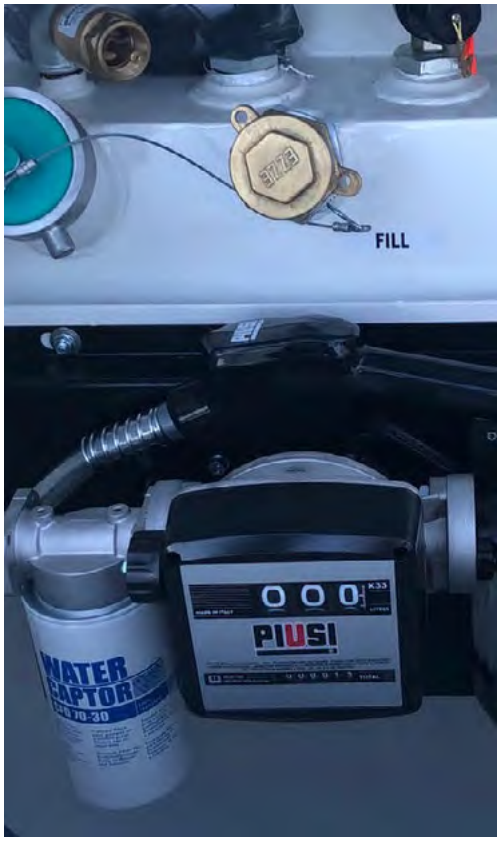


### PACKAGING

| CODE | WEIGHT | | PACKAGING | | |
|---|---|---|---|---|---|
| | KG | LBS | MM | INCH | PCS/BOX |
| F00386F0A | 25 | 55 | 580X380X320 | 22,8X15X12,6 | 1 |
| F00265F0A | 26 | 57 | 580X380X320 | 22,8X15X12,6 | 1 |
| F00395F0A | 32 | 71 | 545X435X340 | 21,5X17,1X13,4 | 1 |
| F00386F60 | 22 | 48 | 380X380X480 | 15X15X18,9 | 1 |
| F00386R70 | 22 | 48 | 380X380X480 | 15X15X18,9 | 1 |
| F00265F40 | 26 | 57 | 580X380X320 | 22,8X15X12,6 | 1 |
| F00265S80 | 26 | 57 | 580X380X320 | 22,8X15X12,6 | 1 |
| F00395F60 | 32 | 71 | 545X435X340 | 21,5X17,1X13,4 | 1 |
| F00265S20 | 18 | 40 | 480X370X260 | 18,9X14,6X10,2 | 1 |
| F00265R70 | 18 | 40 | 480X370X260 | 18,9X14,6X10,2 | 1 |
| F00395B00 | 29 | 63 | 560X450X370 | 22X17X14,5 | 1 |
| F00265B00 | 21 | 46 | 580X400X340 | 22,8X15,7X13,3 | 1 |

ANY BIODIESEL | AIR | ANTIFREEZE | AdBlue® | BIODIESEL | DIESEL | FOOD | GASOLINE | GREASE | KEROSENE | OIL | WATER | WINDSCREEN

## AVAILABLE WITH DIFFERENT PUMPS AND METERS

AC PUMP - PANTHER 56/72

AC PUMP - E120

AUTOMATIC NOZZLE

MECHANICAL METER - K33

ELECTRONIC METER - K24

K600 B/3

## IN THE BOX

- ST WITH METER AND FILTER
- METER
- FILTER
- DELIVERY HOSE
- NOZZLE
- NOZZLE HOLDER
- INSTRUCTION MANUAL

## DETAILS

WATER CAPTOR FILTER

MAN. / AUTOM. NOZZLE

K24 / K600 B/3 METER

K33 METER

## DIMENSIONS

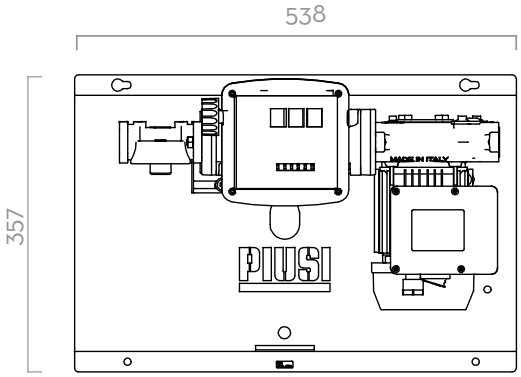


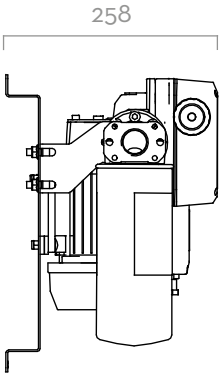


*Dimensions expressed in millimeters*

## COMPONENTS

- PUMPS:
  PANTHER AC
  E80/E120
- NOZZLE:
  AUTOMATIC NOZZLE
- METER:
  K33
  K24
  K600 B/3
- FILTER
  WATER CAPTOR

## TECHNICAL DATA

| CODE | DESCRIPTION | FLUIDS TYPE | FLOW RATE | | VOLTAGE | | | METER | NOZZLE | FILTER | | DELIVERY HOSE | | SUCTION HOSE | INLET |
|---|---|---|---|---|---|---|---|---|---|---|---|---|---|---|---|
| | | | L/MIN | GPM | AC V./HZ DC VOLT | POWER. WATT | AMP. MAX. | TYPE | TYPE | H2O FILTER | BIO-DIE-SEL | LENGHT | Ø | LENGHT | BSP |
| F00386F0A | ST PANTHER 56 FILTER + A60 | D | 52 | 14 | 230/50 | 350 | 3 | K33 | A60 | YES | NO | 6M | 3/4" | 4M | 1" |
| F00265F0A | ST PANTHER 72 FILTER + A60 | D | 70 | 18 | 230/50 | 500 | 4,2 | K33 | A60 | YES | NO | 6M | 3/4" | 4M | 1" |
| F00395F0A | ST E120 FILTER + A120 | D | 85 | 22 | 230/50 | 1150 | 5,7 | K33 | A120 | YES | NO | 6M | 1" | 4M | 1" |
| F00386F60 | ST PANTHER 56 FILTER + A60 | D | 52 | 14 | 230/50 | 350 | 3 | K33 | A60 | YES | NO | 6M | 3/4" | - | - |
| F00386R70 | ST PANTHER 56 + CLEAR CAPTOR + A60 | D | 52 | 14 | 230/50 | 350 | 3 | K33 | A60 | YES | NO | 6M | 3/4" | - | - |
| F00265F40 | ST PANTHER 72 FILTER + A60 | D | 70 | 18 | 230/50 | 500 | 4,2 | K33 | A60 | YES | NO | 6M | 3/4" | - | - |
| F00265S80 | ST PANTHER 72 K600 B/F/6T/PA60 | D | 70 | 18 | 230/50 | 500 | 4,2 | K600 B/3 | A60 | YES | NO | 6M | 1" | - | - |
| F00395F60 | ST E 120 FILTER + A120 | D | 85 | 22 | 230/50 | 1150 | 5,7 | K33 | A120 | YES | NO | 6M | 1" | - | - |
| F00265S20 | ST PANTHER 72 FILTER + K24 METER | D | 70 | 18 | 230/50 | 500 | 4,2 | K24 | A80 | YES | NO | 6M | 3/4" | - | - |
| F00265R70 | ST PANTHER 72 + CLEAR CAPTOR + A80 | D | 70 | 18 | 230/50 | 500 | 4,2 | K24 | A80 | YES | NO | 6M | 1" | - | - |
| F00395B00 | ST E120 K150/F/6MT/PA120 B100 | D | 85 | 22 | 230/50 | 1150 | 5,7 | K150 BIO | A120 BIO | NO | YES | 6M | 1" | - | - |
| F00265B00 | ST PANTHER 72 K33/F/6MT/PA70 B100 | D | 70 | 18 | 230/50 | 500 | 4,2 | K33 BIO | A70 BIO | NO | YES | 6M | 3,4" | - | - |

# ST BOX

## FEATURES

- STURDY STRUCTURE
- LOCKABLE AND SAFE
- READY TO USE
- FILTRATION GUARANTEED
- NOZZLE CONTACT (PRO VERSION ONLY)

The PIUSI ST BOX is a diesel refueling station complete with pump, flow meter and filter, with lockable metal protection box. The unit is complete with antistatic hose for diesel fuel and automatic dispensing nozzle. The PRO version features the electronic access control box (ACCESS 85).

### PERFORMANCE

| | |
|---|---|
| UP TO 90 L/MIN | FLOW RATE |
| AC CONTINUOUS DUTY | POWER |
| ± 1% | ACCURACY |

### PACKAGING

| CODE | WEIGHT | | PACKAGING | | |
|---|---|---|---|---|---|
| | KG | LBS | MM | INCH | PCS/BOX |
| F00365020 | - | - | - | - | - |
| F00365050 | 36 | 72 | 575X320X607 | 22,6X12,6X23,9 | 1 |
| F00399000A | 50 | 110 | 590X340X720 | 23,2X13,4X28,3 | 1 |
| F00365010 | 40 | 88 | 575X320X607 | 22,6X12,6X23,9 | 1 |
| F00365B40 | 40 | 88 | 575X320X607 | 22,6X12,6X23,9 | 1 |
| F00365B30 | 40 | 88 | 575X320X607 | 22,6X12,6X23,9 | 1 |

ANY BIODIESEL | AIR | ANTIFREEZE | AdBlue® | BIODIESEL | DIESEL | FOOD | GASOLINE | GREASE | KEROSENE | OIL | WATER | WINDSCREEN

## CHART

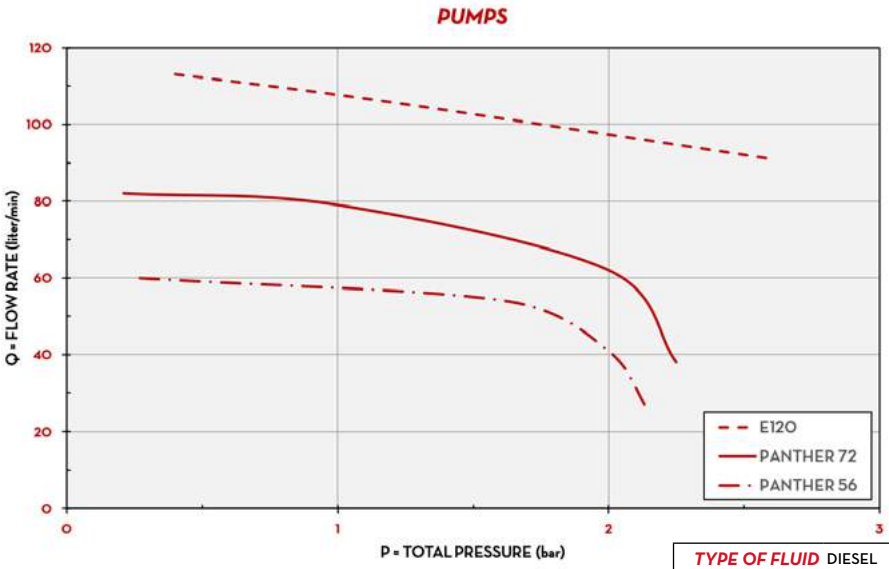


| | |
|---|---|
| TYPE OF FLUID | DIESEL |
| TEMPERATURE | 20°C |

## IN THE BOX

- ST BOX UNIT
- METER
- FILTER
- DELIVERY HOSE
- NOZZLE
- INSTRUCTION MANUAL

## DETAILS

K33 MECH. METER

WATER CAPTOR FILTER

DRIVER&MANAGER KEY

ACCESS 85

## DIMENSIONS

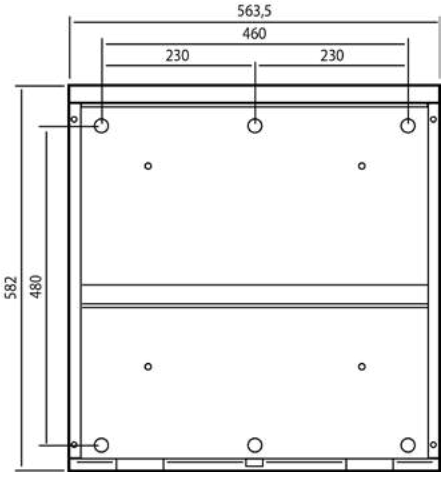


*Dimensions expressed in millimeters*

## COMPONENTS

- PUMPS:
  PANTHER AC
  E80/E120
  BIPUMP
- NOZZLE:
  AUTOMATIC NOZZLE
- METER:
  K33
  K24
- FILTER
  WATER CAPTOR
- ACCESS CONTROL
  ACCESS85

## TECHNICAL DATA

| CODE | DESCRIPTION | FLUIDS TYPE | FLOW RATE | | VOLTAGE | | | PUMP | METER | NOZZLE | FILTER | HOSE | | INLET |
|---|---|---|---|---|---|---|---|---|---|---|---|---|---|---|
| | | | L/MIN | GPM | AC V./HZ DC VOLT | POWER WATT | AMP. MAX. | TYPE | TYPE | TYPE | H2O FILTER | LENGTH | Ø | BSP |
| F00365020 | ST BOX PANTHER 56 BASIC | D | 56 | 15 | 230/50 | 350 | 3 | PANTH. 56 | K33 | A60 | YES | 6M | 1" | 1" |
| F00365050 | ST BOX E 120 BASIC | D | 90 | 22 | 230/50 | 750 | 5,7 | E 120 | K33 | A120 | YES | 8M | 1" | 1" |
| F00399000A | ST BOX BIPUMP 12V K33 A120 | D | 80 | 21 | 12 | 530 | 44 | BIPUMP | K33 | A80 | NO | 4M | 1" | 1" |
| F00365010 | ST BOX PANTHER 72 PRO - ACCESS 85 | D | 70 | 19 | 230/50 | 500 | 4,2 | PANTH.72 | K33 | A60 | YES | 8M | 1" | 1" |
| F00365B40 | ST BOX P72M K600 B/3 PULS A70 WC 6M B100 | D BIO | 70 | 19 | 230/50 | 500 | 4,2 | PANTH.72 | K600 | A70 | YES | 6M | 1" | 1" |
| F00365B30 | ST CASSETTA P72/M K33 A70 WC 6MT B100 | D BIO | 70 | 19 | 230/50 | 500 | 4,2 | PANTH.72 | K33 | A70 | YES | 6M | 1" | 1" |

PRO VERSION ONLY

# ST 200 AC

## FEATURES

- *STURDY METALLIC FRAME*
- *READY TO USE*
- *EASY TO MOVE*
- *HEAVY DUTY*

The PIUSI ST 200 AC is a dispenser that allows high flow refueling thanks to the two integrated E120 self-priming rotary electric vane pumps. Fitted with by-pass valve and elevated reliability seal, the dispenser works even at low working temperatures and in every condition on worksites. The oval gear mechanical flow meter guarantees great precision (available on request). It is also available with wheels and handle (on request) for easier handling.

### PERFORMANCE

| UP TO 200 L/MIN | AC CONTINUOUS DUTY |
|---|---|
| FLOW RATE | POWER |

ST 200 AC

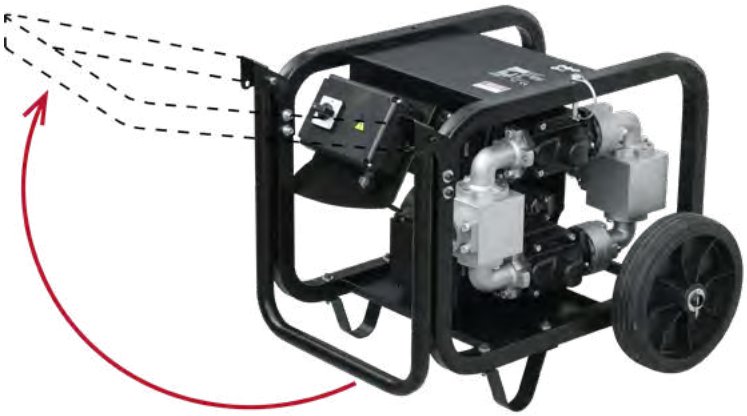

HANDY KIT: VERSION WITH WHEELS AND HANDLE

### PACKAGING

| CODE | WEIGHT | | PACKAGING | | |
|---|---|---|---|---|---|
| | KG | LBS | MM | INCH | PCS/BOX |
| F00315000 | 46 | 101 | 587X395X420 | 23,1X15,6X16,5 | 1 |
| F16860000 | - | - | - | - | - |

## CHART

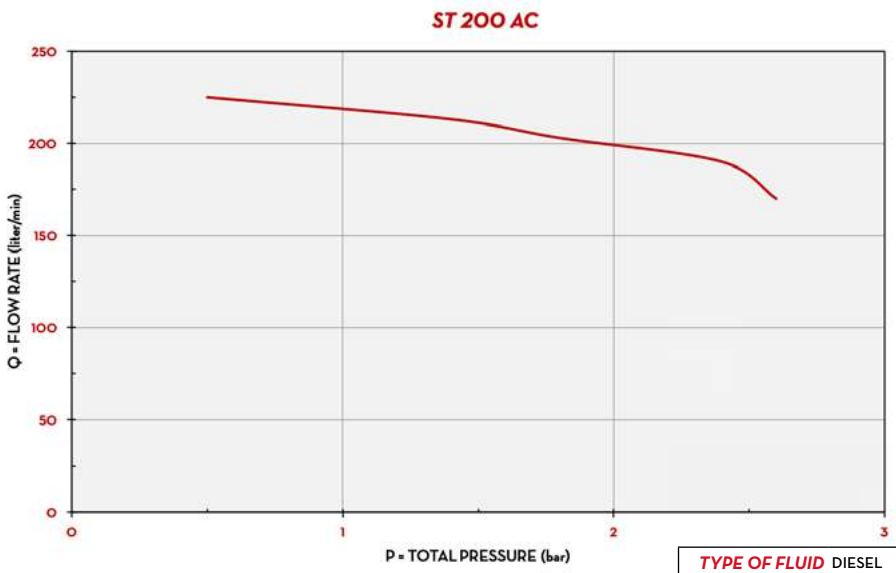


| | |
|---|---|
| TYPE OF FLUID | DIESEL |
| TEMPERATURE | 13°C |

## IN THE BOX

- ST 200 AC UNIT
- INSTRUCTION MANUAL

## DETAILS

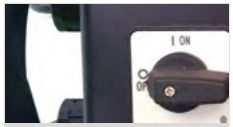


ON/OFF SWITCH

## DIMENSIONS

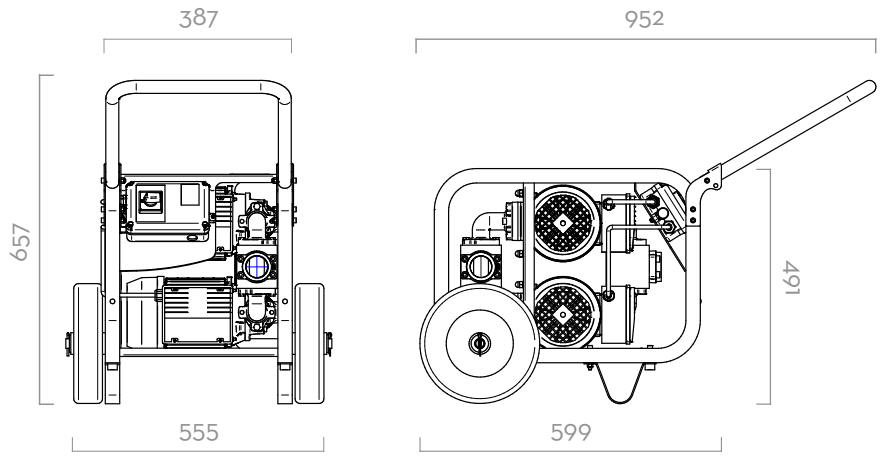


*Dimensions expressed in millimeters*

## MATERIALS

- BODY: CAST IRON
- ROTOR: SINTERED STEEL
- VANES: ACETAL RESIN
- SEAL: VITON
- SHAFT: STEEL

## TECHNICAL DATA

| CODE | DESCRIPTION | FLUIDS TYPE | FLOW RATE | | VOLTAGE | | | PUMP | | MAX PRESSURE | OUTLET |
|---|---|---|---|---|---|---|---|---|---|---|---|
| | | | L/MIN | GPM | AC V./HZ DC VOLT | POWER WATT | AMP. MAX. | TYPE | N° | BAR | BSP |
| F00315000 | ST 200 BASIC | D | 200 | 52,7 | 230/50 | 2050 | 10 | E 120 | 2 | 2,5 | 1" 1/2 |
| F16860000 | HANDY KIT (HANDLE + WHEELS) | D | - | - | - | - | - | - | - | - | - |

# ST 200 DC

## FEATURES

- STURDY STRUCTURE
- COMPACT DESIGN
- READY TO USE
- HIGH RELIABILITY
- HEAVY DUTY

PIUSI ST 200 DC is a 24V portable dispensing unit for high flow applications. The low weight of the unit makes it easy to handle and suitable for operating on worksites in every condition; both on tanks or for mobile applications. Thanks to the mechanical meter K700, this sturdy dispenser guarantees the maximum precision (on request).

### PERFORMANCE

| | |
|---|---|
| UP TO 185 L/MIN | 24V VOLTAGE |
| FLOW RATE | POWER |
| 20 MIN (40MIN OFF) | |
| DUTY CICLE | |

ST 200 DC

### PACKAGING

| CODE | WEIGHT | | PACKAGING | | |
|---|---|---|---|---|---|
| | KG | LBS | MM | INCH | PCS/BOX |
| F00318000 | 18 | 40 | 480X370X265 | 18,9X14,6X10,4 | 1 |

## CHART

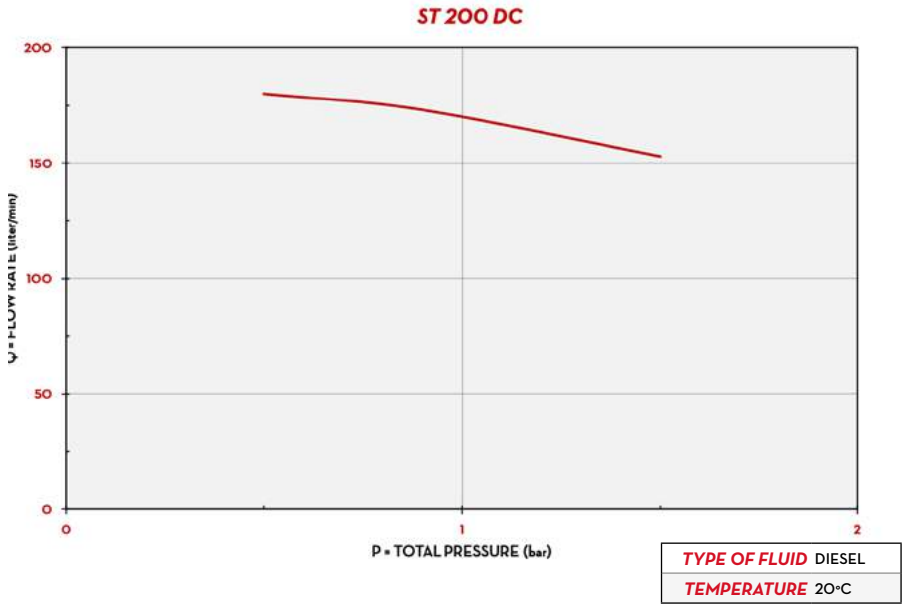


| | |
|---|---|
| TYPE OF FLUID | DIESEL |
| TEMPERATURE | 20°C |

## IN THE BOX

- ST 200 DC UNIT
- ELECTRIC CABLE WITH CLAMPS
- INSTRUCTION MANUAL

## DETAILS

ON/OFF SWITCH

ELECTRIC CABLE WITH CLAMPS

## DIMENSIONS

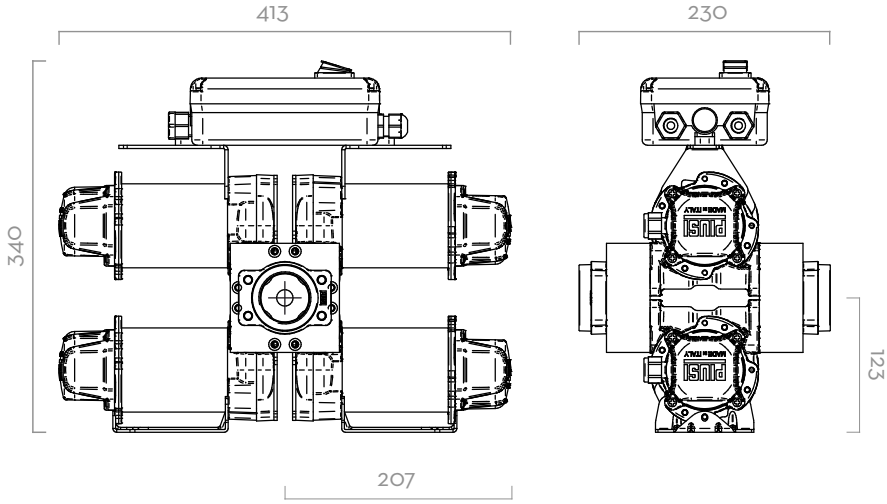


*Dimensions expressed in millimeters*

## MATERIALS

- BODY: CAST IRON
- ROTOR: SINTERED STEEL
- VANES: ACETAL RESIN
- SEAL: NBR
- SHAFT: STEEL

## TECHNICAL DATA

| CODE | DESCRIPTION | FLUIDS TYPE | FLOW RATE | | VOLTAGE | | | DUTY CICLE | PUMP | | MAX PRESSURE | OUTLET |
|---|---|---|---|---|---|---|---|---|---|---|---|---|
| | | | L/MIN | GPM | AC V./HZ DC VOLT | POWER WATT | AMP. MAX. | MINUTES | TYPE | N° | BAR | BSP |
| F00318000 | ST 200 DC 24 V | D | 185 | 42-48 | 24 | 1200 | 50 | 30 | BYPASS 3000 | 4 | 2 | 1" 1/2 |

# KITS ACCESSORIES

## ATEX

| EX50 DRUM | CODICE | DESCRIZIONE |
|---|---|---|
| | F1815600B | (EX) ADAPTER FOR CONDUIT EX50 |
| | F1862600A | (EX)CABLE+CABLEGLAND ECEX EX50 12V |
| | F20305000 | KIT ANTISIFONE EX50 |

F1815600B F1862600A

| EX100 DRUM | CODICE | DESCRIZIONE |
|---|---|---|
| | F21770000 | BUNG ADAPTER 2" BSP COMPLETE |
| | F22436010 | ANTISIPHONE KIT FOR EX100/EX140/E140 BSP |
| | F22053000 | MOTOR SUPPORT FEET EX80/100/140 |

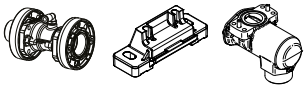

F22436010 F22053000 F21770000

| EX140 DRUM | CODICE | DESCRIZIONE |
|---|---|---|
| | F21770000 | BUNG ADAPTER 2" BSP COMPLETE |
| | F22436010 | ANTISIPHONE KIT FOR EX100/EX140/E140 BSP |
| | F22053000 | MOTOR SUPPORT FEET EX80/100/140 |

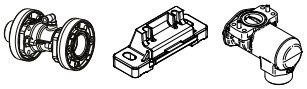

F22436010 F22053000 F21770000

| EX50 ST | CODICE | DESCRIZIONE |
|---|---|---|
| | F1815600B | (EX) ADAPTER FOR CONDUIT EX50 |
| | F1862600A | (EX)CABLE+CABLEGLAND ECEX EX50 12V |

F1815600B F1862600A

## MOBILE

| BATTERIA KIT | CODICE | DESCRIZIONE |
|---|---|---|
| | F16586000 | DRUM 3000 KIT |
| | F16631000 | KIT DRUM 3000 K33 / FILTER / ADAPTER |

F16586000 F16631000

| PIUSIBOX | CODICE | DESCRIZIONE |
|---|---|---|
| | F16483010 | CARTUCCIA 10 MICRON 3/4IN PIUSI BOX 15PC |
| | R20764000 | K24 ASSEMBLY KIT FOR PIUSIBOX N. |

R20764000 F16483010

## ST

| ST BOX | CODE | DESCRIPTION |
|---|---|---|
| | F1249600A | MANAGER KEY 2018 |
| | F1590400A | KIT DRIVER KEY YELLOW (10PCS) |
| | F17121000 | LEVEL PROBE FOR ACCESS 85 |
| | F1721800A | ST BOX NEW |

F17121000

F1249600A

F1590400A

| ST 200 AC | CODE | DESCRIPTION |
|---|---|---|
| | F16860000 | KIT WHEELS \ HANDLE ST200 |
| | F18798000 | KIT HOSE 1 1/2" 10 MT+CAMLOCK+HOSETAIL |
| | F18799000 | KIT HOSE 1 1/2" 20 MT+CAMLOCK+HOSETAIL |

F18798000

F18799000

F16860000

| ST 200 DC | CODE | DESCRIPTION |
|---|---|---|
| | F18798000 | KIT HOSE 1 1/2" 10 MT+CAMLOCK+HOSETAIL |
| | F18799000 | KIT HOSE 1 1/2" 20 MT+CAMLOCK+HOSETAIL |

F18798000

F18799000

# PUMPS

# EX100

## FEATURES

- HIGH FLOW RATE
- HEAVY DUTY
- CONTINUOUS DUTY
- THERMAL PROTECTION
- UL VERSION AVAILABLE
- REMOVABLE PUMP FEET

PIUSI EX100 is the new pump of the EX line, suitable for the transfer of gasoline and diesel with high performance and continuous duty. The directive on the use of materials in potentially explosive atmospheres is very precise, as confirmed by the ATEX certification. Simple to use, compact, versatile, it performs high flow rate and continuous duty cycle.

### PERFORMANCE

| UP TO 100 L/MIN | AC VOLTAGE |
|---|---|
| FLOW RATE | POWER |

Atex II 2 G

EX100

OUR PUMPS COMPLIES WITH THE FOLLOWING MARKING ATEX/IECEx

| II | 2 | G | Ex | d | IIA | T4 | Gb |
|---|---|---|---|---|---|---|---|
| GROUP | CATEGORY | TYPE OF EXPLOSIVE ATMOSPHERE | PERMANENT PREFIX | PROTECTION METHOD | GAS GLASS | TEMPERATURE CLASS | EQUIPMENT PROTECTION LEVEL |

### PACKAGING

| CODE | WEIGHT | | PACKAGING | | |
|---|---|---|---|---|---|
| | KG | LBS | MM | INCH | PCS/BOX |
| F00390010 | 25 | 55 | 240X400X350 | 9,4X15,7X13,8 | 1 |
| F00390020 | 25 | 55 | 240X400X350 | 9,4X15,7X13,8 | 1 |
| F00390030 | 25 | 55 | 240X400X350 | 9,4X15,7X13,8 | 1 |

ANY BIODIESEL · AIR · ANTIFREEZE · AdBlue® · BIODIESEL · DIESEL · FOOD · GASOLINE · GREASE · KEROSENE · OIL · WATER · WINDSCREEN

## CHART

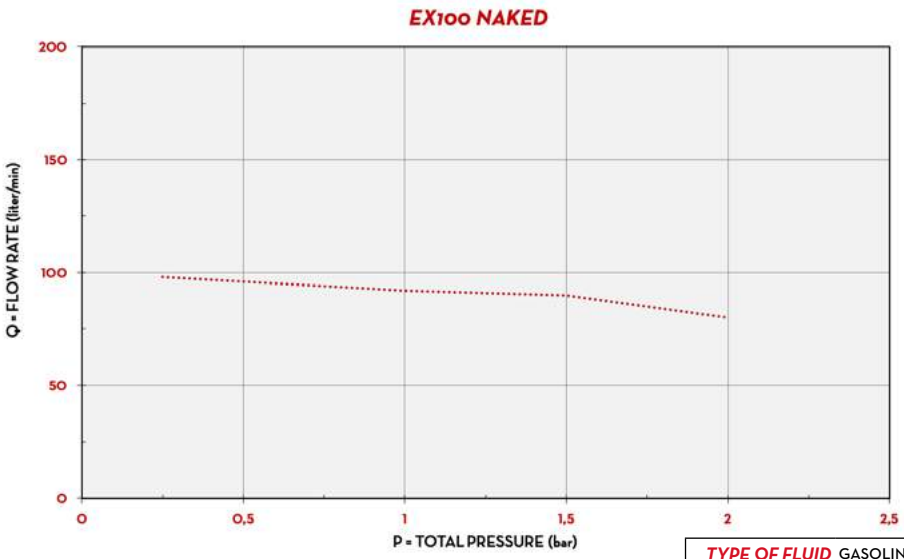


| | |
|---|---|
| TYPE OF FLUID | GASOLINE |
| TEMPERATURE | 20°C |

## IN THE BOX

- EX100 PUMP
- PUMP FEET
- INSTRUCTION MANUAL

## DETAILS

ON/OFF SWITCH

VANE ROTOR

BYPASS VALVE

## DIMENSIONS

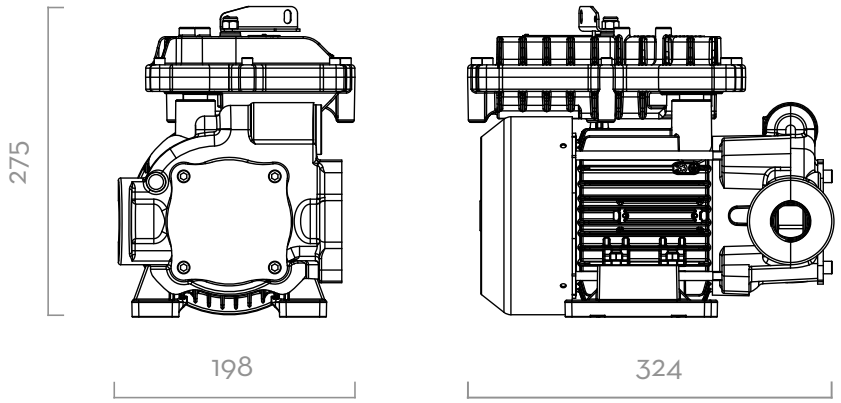


## MATERIALS

- BODY: CAST IRON
- ROTOR: SINTERED STEEL
- VANES: TECHNOPOLYMER
- SEAL: VITON
- SHAFT: STEEL

PUMP ← TANK

- MAX 6M (20FT),
- SUCTION HOSE Ø 1" MIN,
- MAX SUCTION HEIGHT:
  - 2M (7FT) W/O NON RETURN VALVE
  - 4M (14FT) W NON RETURN VALVE

*Dimensions expressed in millimeters*

## TECHNICAL DATA

| CODE | DESCRIPTION | FLUIDS TYPE | FLOW RATE | | VOLTAGE | | | RPM | INLET | OUTLET |
|---|---|---|---|---|---|---|---|---|---|---|
| | | | L/MIN | GPM | AC VOLT/HZ | POWER WATT | AMP. MAX. | | BSP | BSP |
| F00390010 | EX 100 230/50 ATEX | D G K | 100 | 25 | 230/50 | 1035 | 4,5 | 1450 | 1" 1/4 | 1" |
| F00390020 | EX 100 230/60 ATEX | D G K | 100 | 25 | 230/60 | 874 | 3,8 | 1750 | 1" 1/4 | 1" |
| F00390030 | EX 100 250/50 ATEX | D G K | 100 | 25 | 250/50 | 1000 | 3,8 | 1450 | 1" 1/4 | 1" |

( ) UPON REQUEST IT IS AVAILABLE WITH DIFFERENT VOLTAGES AND 60 HZ FREQUENCY. COMPATIBLE FLUIDS: DIESEL, KEROSENE, PETROL, PETROL ALCOHOL MIXED MAX 15%, ASPEN 2/4

# EX140

## FEATURES

- HIGH FLOW RATE
- HEAVY DUTY
- CONTINUOUS DUTY
- THERMAL PROTECTION
- UL VERSION AVAILABLE
- REMOVABLE PUMP FEET

The entirely new EX line is characterized by a high flow rate that works with a continuous duty cycle, and has been designed to be particularly suitable for Heavy Duty, i.e.for those demanding fleets that need to dispense fuels such as Gasoline, diesel or kerosene quickly.

### PERFORMANCE

| UP TO 140 L/MIN | AC VOLTAGE |
|---|---|
| FLOW RATE | POWER |

Atex II 2 G

EX140

OUR PUMPS COMPLIES WITH THE FOLLOWING MARKING ATEX/IECEx

| II | 2 | G | Ex | d | IIA | T4 | Gb |
|---|---|---|---|---|---|---|---|
| GROUP | CATEGORY | TYPE OF EXPLOSIVE ATMOSPHERE | PERMANENT PREFIX | PROTECTION METHOD | GAS GLASS | TEMPERATURE CLASS | EQUIPMENT PROTECTION LEVEL |

## PACKAGING

| CODE | WEIGHT | | PACKAGING | | |
|---|---|---|---|---|---|
| | KG | LBS | MM | INCH | PCS/BOX |
| F00395010 | 25 | 55 | 240X400X350 | 9,4X15,7X13,8 | 1 |
| F00395020 | 25 | 55 | 240X400X350 | 9,4X15,7X13,8 | 1 |
| F00395030 | 25 | 55 | 240X400X350 | 9,4X15,7X13,8 | 1 |

ANY BIODIESEL · AIR · ANTIFREEZE · AdBlue® · BIODIESEL · DIESEL · FOOD · GASOLINE · GREASE · KEROSENE · OIL · WATER · WINDSCREEN

## CHART

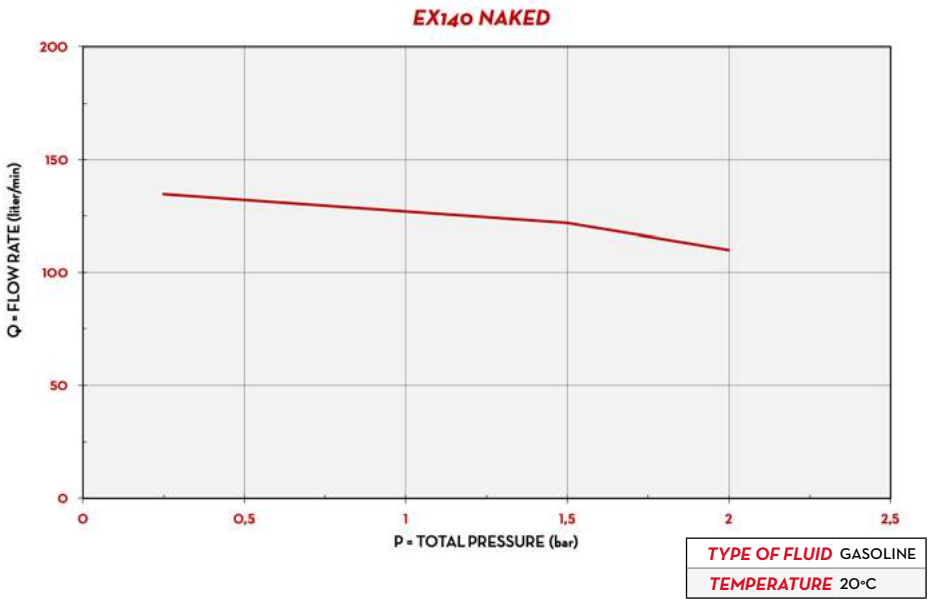


## IN THE BOX

- EX140 PUMP
- PUMP FEET
- INSTRUCTION MANUAL

## DETAILS

ON/OFF SWITCH

VANE ROTOR

BYPASS VALVE

## DIMENSIONS

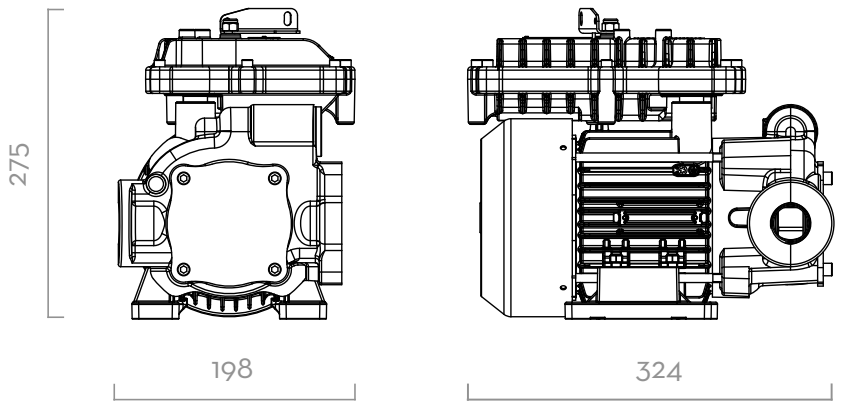


## MATERIALS

- BODY: CAST IRON
- ROTOR: SINTERED STEEL
- VANES: TECHNOPOLYMER
- SEAL: VITON
- SHAFT: STEEL

PUMP ← TANK

- MAX 6M (20FT),
- SUCTION HOSE Ø 1" MIN,
- MAX SUCTION HEIGHT:
  - 2M (7FT) W/O NON RETURN VALVE
  - 4M (14FT) W NON RETURN VALVE

*Dimensions expressed in millimeters*

## TECHNICAL DATA

| CODE | DESCRIPTION | FLUIDS TYPE | FLOW RATE | | VOLTAGE | | | RPM | INLET | OUTLET |
|---|---|---|---|---|---|---|---|---|---|---|
| | | | L/MIN | GPM | AC VOLT/HZ | POWER WATT | AMP. MAX. | | BSP | BSP |
| F00395010 | EX 140 230/50 | D G K | 140 | 37 | 230/50 | 1150 | 5 | 1450 | 1" 1/4 | 1" |
| F00395020 | EX 140 250/50 | D G K | 140 | 37 | 250/50 | 1125 | 4,5 | 1450 | 1" 1/4 | 1" |
| F00395030 | EX 140 230/60 | D G K | 140 | 37 | 230/60 | 920 | 4 | 1750 | 1" 1/4 | 1" |

( ) UPON REQUEST IT IS AVAILABLE WITH DIFFERENT VOLTAGES AND 60 HZ FREQUENCY. COMPATIBLE FLUIDS: DIESEL, KEROSENE, PETROL, PETROL ALCOHOL MIXED MAX 15%, ASPEN 2/4

# PANTHER EX 56

## FEATURES

- HIGH FLOW RATE
- HEAVY DUTY
- CONTINUOUS DUTY
- THERMAL PROTECTION
- UL VERSION AVAILABLE
- REMOVABLE PUMP FEET
- MAGNETIC SWITCH

The new PANTHER EX AC pump series by PIUSI, designed for Heavy Duty applications, delivers superior performance and uncompromising reliability. Resulting from advanced research and development, this pump sets new standards with a flow rate of 56 l/min, the highest in its category.
Capable of maintaining high performance even at high pressures, the PANTHER EX is ideal for various tank configurations and accessories, ensuring efficiency and versatility in every application.

### PERFORMANCE

| UP TO 56 L/MIN | 230V/50HZ |
|---|---|
| FLOW RATE | VOLTAGE |

FEET VERSION

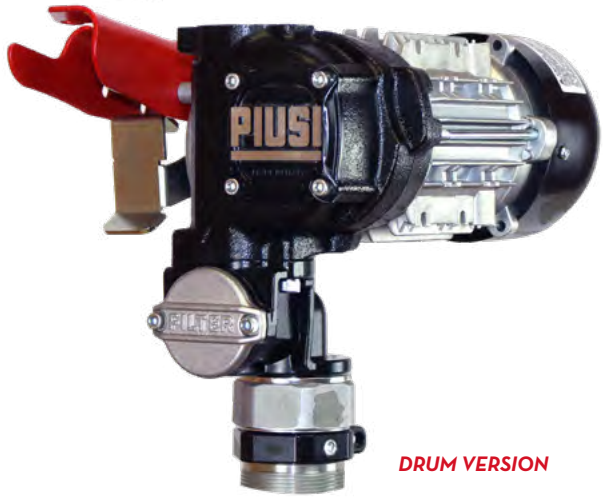


DRUM VERSION

Atex II 2 G

CLASSIFIED c UL us

IEC Ex CES 12.0016X

Pump only

OUR PUMPS COMPLIES WITH THE FOLLOWING MARKING ATEX/IECEx

| II | 2 | G | Ex | d | IIA | T4 | Gb |
|---|---|---|---|---|---|---|---|
| GROUP | CATEGORY | TYPE OF EXPLOSIVE ATMOSPHERE | PERMANENT PREFIX | PROTECTION METHOD | GAS GLASS | TEMPERATURE CLASS | EQUIPMENT PROTECTION LEVEL |

### PACKAGING

| CODE | WEIGHT | | PACKAGING | | | N. BOX / EUROPALLET | |
|---|---|---|---|---|---|---|---|
| | KG | LBS | MM | INCH | PCS/BOX | ✈ | |
| F00580000 | 12,4 | 24 | 40X24X30 | 15,7X9,4X11,8 | 1 | - | - |
| F00580010 | 12,4 | 24 | 40X24X30 | 15,7X9,4X11,8 | 1 | - | - |

ANY BIODIESEL AIR ANTIFREEZE AdBlue® BIODIESEL DIESEL FOOD GASOLINE GREASE KEROSENE OIL WATER WINDSCREEN

## CHART

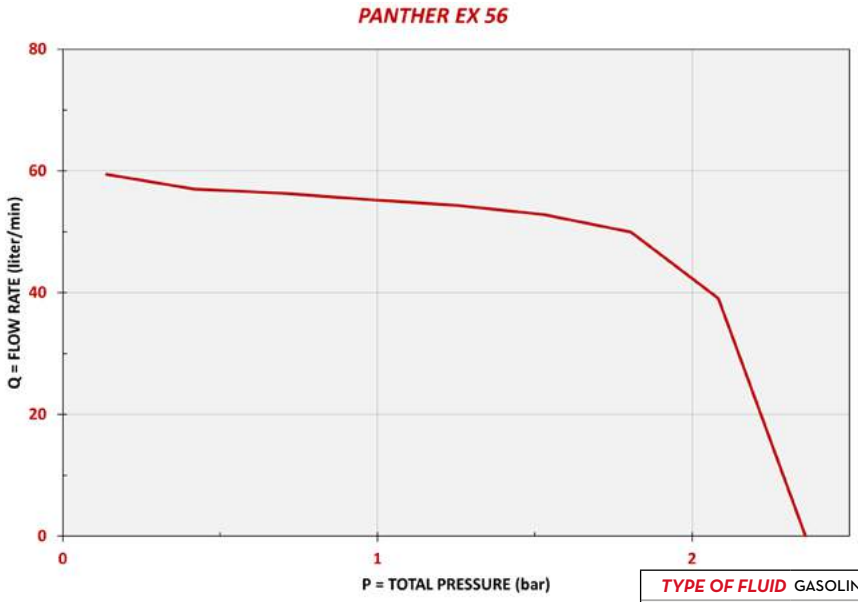


| | |
|---|---|
| TYPE OF FLUID | GASOLINE |
| TEMPERATURE | 20°C |

## IN THE BOX

PANTHER EX 56 - DRUM VERSION

- PANTHER EX 56 - DRUM
- NOZZLE HOLDER
- DRUM CONNECTOR
- INSTRUCTION MANUAL

PANTHER EX 56 - FEET VERSION

- PANTHER EX 56 - FEET
- NON-MOUNTED FEET
- INSTRUCTION MANUAL

## DETAILS

ON/OFF SWITCH

VANE ROTOR

BYPASS VALVE

## MATERIALS

- BODY: CAST IRON
- ROTOR: SINTERED STEEL
- VANES: TECHNOPOLYMER
- SEAL: VITON
- SHAFT: STEEL

## DIMENSIONS

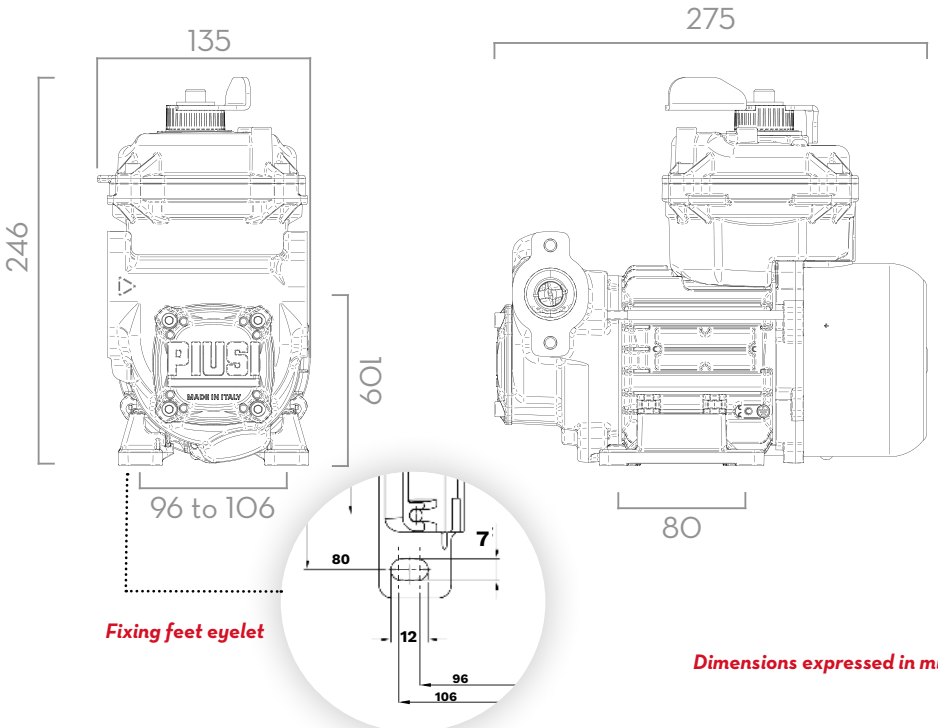


*Fixing feet eyelet*

*Dimensions expressed in millimeters*

## TECHNICAL DATA

| CODE | DESCRIPTION | FLUIDS TYPE | FLOW RATE | | VOLTAGE | | | DUTY CICLE | RPM | INLET | OUTLET |
|---|---|---|---|---|---|---|---|---|---|---|---|
| | | | L/MIN | GPM | AC VOLT/HZ | POWER WATT | AMP. MAX. | CONTINUOUS | | BSP | BSP |
| F00580000 | (EX) PANTHER EX 56 230V 50HZ FEET -PUMP ONLY- | D G K | 56 | 14,7 | 230V/50HZ | 500 | 2.3 | S1 | 2800 | 1" | 1" |
| F00580010 | (EX) PANTHER EX 56 230V 50HZ DRUM -PUMP ONLY- | D G K | 56 | 14,7 | 230V/50HZ | 500 | 2.3 | S1 | 2800 | 1" | 1" |

# EX50 / EX75 DC

## FEATURES

- COMPACT AND STURDY DESIGN
- FLANGED COMPONENTS
- ANTI-NOISE FILTER
- THERMAL PROTECTION
- SUCTION UNIT WITH INTEGRATED FILTER (DRUM VERSION)
- UL LISTED MOTOR AVAILABLE

The PIUSI EX50/EX75 DC is a transfer pump suitable for flammable fuels such as petrol, kerosene and diesel. It is fully compliant with ATEX/IECEx requirements for the usage in potentially explosive atmospheres. Designed to transfer flammable fluids from tanks of any type, this pump is available in DC version and is fitted with a bypass valve and can dispense up to 75 l/min, with reduced absorption to ensure a long life to the pump.

### PERFORMANCE

| UP TO 75 L/MIN | DC 12V VOLTAGE |
|---|---|
| FLOW RATE | POWER |

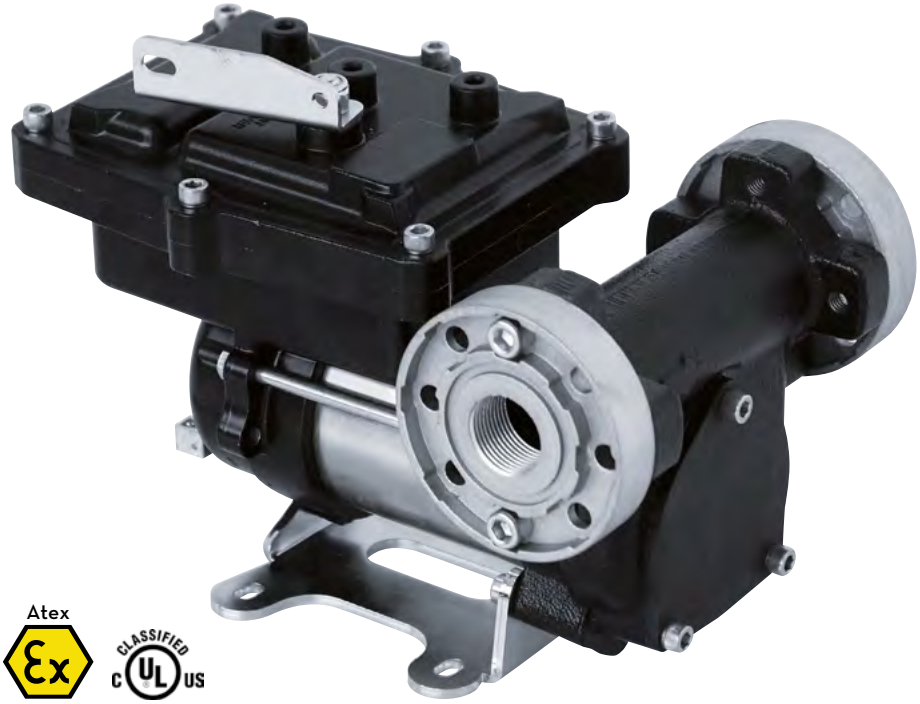

EX75 DC

Atex II 2 G

OUR PUMPS COMPLIES WITH THE FOLLOWING MARKING ATEX/IECEx

| II | 2 | G | Ex | d (EX50) / db (EX75) | IIA (EX50) / IIB (EX75) | T4 | Gb |
|---|---|---|---|---|---|---|---|
| GROUP | CATEGORY | TYPE OF EXPLOSIVE ATMOSPHERE | PERMANENT PREFIX | PROTECTION METHOD | GAS GLASS | TEMPERATURE CLASS | EQUIPMENT PROTECTION LEVEL |

### PACKAGING

| CODE | WEIGHT | | PACKAGING | | | N. BOXES / EUROPALLET | |
|---|---|---|---|---|---|---|---|
| | KG | LBS | MM | INCH | PCS/BOX | ✈ | 🚢 |
| F00371000 | 6,9 | 15,2 | 345X175X225 | - | 1 | 60 | 84 |
| F00380000 | 8 | 17,8 | 350X185X260 | - | 1 | 60 | 84 |

ANY BIODIESEL · AIR · ANTIFREEZE · AdBlue® · BIODIESEL · DIESEL · FOOD · GASOLINE · GREASE · KEROSENE · OIL · WATER · WINDSCREEN

## CHART

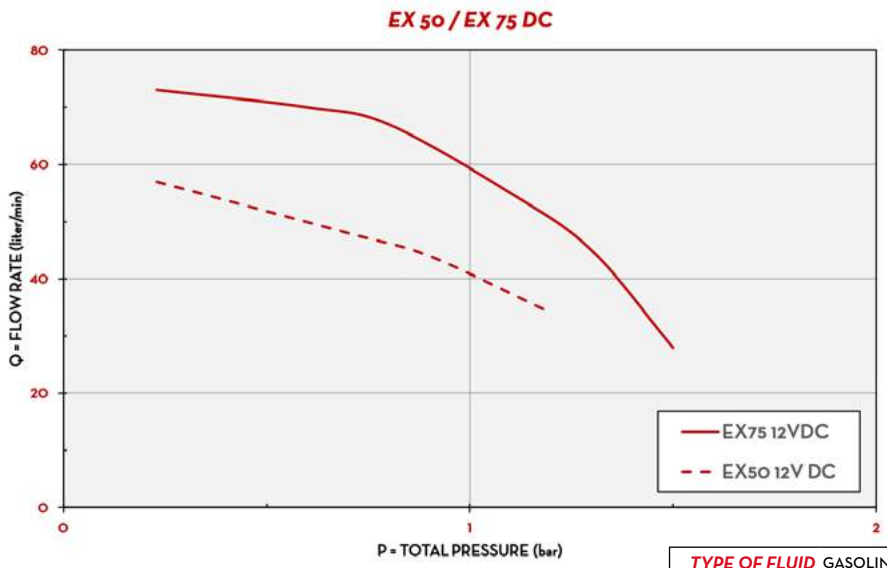


| | |
|---|---|
| TYPE OF FLUID | GASOLINE |
| TEMPERATURE | 20#C |

## IN THE BOX

- EX50 / EX75 DC PUMP
- FLANGED CONNECTIONS
- INSTRUCTION MANUAL

## DETAILS

ON/OFF SWITCH

FLANGED CONNECTIONS

## DIMENSIONS

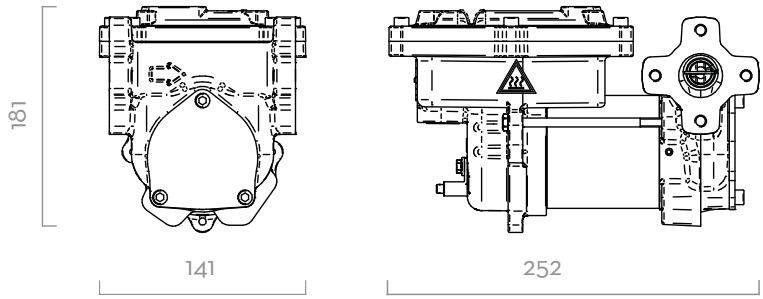


## MATERIALS

- BODY: CAST IRON
- ROTOR: SINTERED STEEL
- VANES: PPS
- SEAL: VITON
- SHAFT: STEEL

PUMP ← TANK

- MAX 6M (20FT),
- SUCTION HOSE Ø 1" MIN,
- MAX SUCTION HEIGHT:
  - 2M (7FT) W/O NON RETURN VALVE
  - 4M (14FT) W NON RETURN VALVE

*Dimensions expressed in millimeters*

## TECHNICAL DATA

| CODE | DESCRIPTION | FLUIDS TYPE | FLOW RATE | | VOLTAGE | | | DUTY CICLE | RPM | OUTLET |
|---|---|---|---|---|---|---|---|---|---|---|
| | | | L/MIN | GPM | AC VOLT/HZ | POWER WATT | AMP. MAX. | MINUTES | | BSP |
| F00371000 | EX50 12V DC ATEX | D G K | 50 | 13 | 12 | 250 | 21 | 30 | 2700 | 1" |
| F00380000 | EX75 12V DC ATEX | D G K | 75 | 19,8 | 12 | 240 | 20 | 30 | 2700 | 1" |

( ) UPON REQUEST IT IS AVAILABLE WITH DIFFERENT VOLTAGES AND 60 HZ FREQUENCY. COMPATIBLE FLUIDS: DIESEL, KEROSENE, PETROL, PETROL ALCOHOL MIXED MAX 15%, ASPEN 2/4

# EXGO!

## FEATURES

- CONTINUOUS DUTY
- COMPACT AND STURDY DESIGN
- EASY TO INSTALL
- BUILT-IN BYPASS
- THERMAL PROTECTION
- REDUCED NOISE LEVEL
- SELF-PRIMING

The PIUSI EX GO! is a compact and sturdy ATEX vane pump; expressly engineered to work safely in potentially explosives atmosphere. As the name says, this continuous duty DC pump is easy to place thanks to the small sizes and represents the ideal solution for small mobile tanks thanks to the remote control (on/off switch) and long cables (5mt EXGO! Switch - 3mt EXGO! without Switch). It can be used to dispense several fluids: Gasoline and E15, Diesel, Paraffinic Biodiesel.
It is equipped with built-in bypass valve and a thermal protected motor.

### PERFORMANCE

| | |
|---|---|
| UP TO 32 L/MIN<br>FLOW RATE | MAX 1,2 BAR<br>OPERATING PRESSURE |
| DC 12V VOLTAGE<br>POWER | CONTINUOUS DUTY |

EXGO!

EXGO! BATTERY KIT

Atex
II 2 G

OUR PUMPS COMPLIES WITH THE FOLLOWING MARKING ATEX/IECEx

| II | 2 | G | Ex | EX50 d | EX75 db | EX50 IIA | EX75 IIB | T4 | Gb |
|---|---|---|---|---|---|---|---|---|---|
| GROUP | CATEGORY | TYPE OF EXPLOSIVE ATMOSPHERE | PERMANENT PREFIX | PROTECTION METHOD | | GAS GLASS | | TEMPERATURE CLASS | EQUIPMENT PROTECTION LEVEL |

### PACKAGING

| CODE | WEIGHT | | PACKAGING | | | N. BOX / EUROPALLET | |
|---|---|---|---|---|---|---|---|
| | KG | LBS | MM | INCH | PCS/BOX | ✈ | 🚢 |
| F00381020 | 5,43 | 12 | 280X160X140 | - | 1 | - | - |
| F00381500 | 5,43 | 12 | 280X160X140 | - | 1 | - | - |
| F00225X00 | 9,8 | 21,6 | 350X350X180 | - | 1 | H | |

ANY BIODIESEL AIR ANTIFREEZE AdBlue® BIODIESEL DIESEL FOOD GASOLINE GREASE KEROSENE OIL WATER WINDSCREEN

## CHART

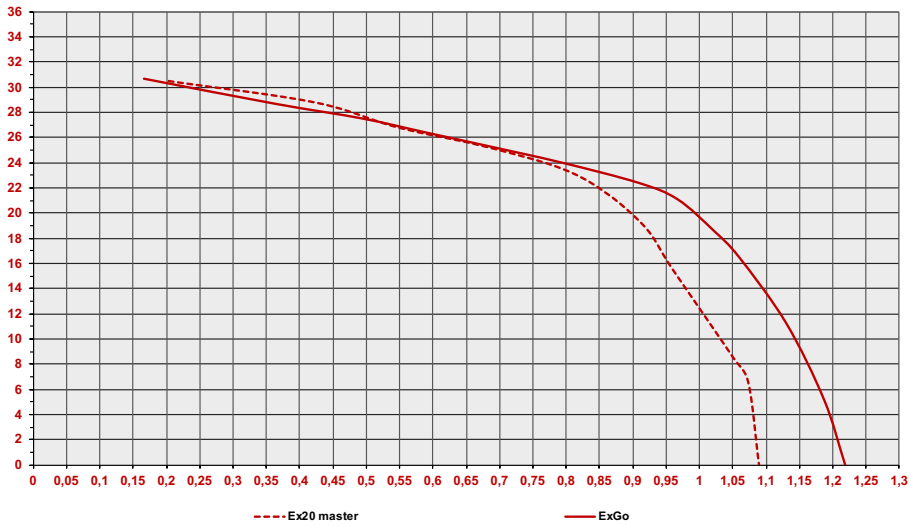


## IN THE BOX

- EXGO! PUMP/EXGO BATTERY KIT
- DELIVERY HOSE 2,5 MT (ONLY EXGO BATTERY KIT)
- SELF2000 NOZZLE (ONLY EXGO BATTERY KIT)
- INSTRUCTION MANUAL

## DETAILS

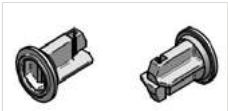
BUILT- IN BY-PASS VALVE

SWITCH ON/OFF

ELECTRIC CABLE WITH CLAMPS

SELF 2000 NOZZLE WITH DELIVERY HOSE 2,5M ONLY EXGO BATTERY KIT

## DIMENSIONS

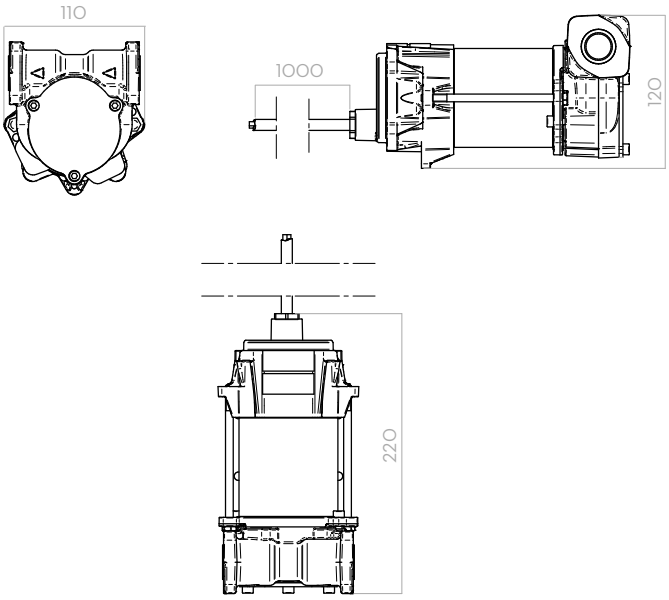


*Dimensions expressed in millimeters*

## MATERIALS

- BODY: CAST IRON
- ROTOR: SINTERED STEEL
- VANES: PPS
- SEAL: FKM
- SHAFT: STEEL

## TECHNICAL DATA

| CODE | DESCRIPTION | FLUIDS TYPE | FLOWRATE | | VOLTAGE | | | FUSIBLES | DUTY CYCLE | NOZZLE | RPM | HOSE | | IN | OUT | CHECK FILTER |
|---|---|---|---|---|---|---|---|---|---|---|---|---|---|---|---|---|
| | | | L/MIN | GPM | DC VOLT | POWER WATT | AMP. MAX. | AMPERE | MINUTE | | | LENGT. | Ø | BSP | | |
| F0038102O | EXGO! 12V DC ATEX | B D G K | 32 | 8,5 | 12 | 108 | 9A | 25A | CONTINUOUS | - | 1400 | - | - | 3/4" | 3/4" | - |
| F0038150O | (EX) EX20 12V DC (W/O SWITCH) | B D G K | 32 | 8,5 | 12 | 108 | 9A | 25A | CONTINUOUS | - | 1400 | - | - | 3/4" | 3/4" | - |
| F00225X0O | EXGO BATTERY KIT | B D G K | 32 | 8,5 | 12 | 108 | 9A | 25A | CONTINUOUS | SELF 2000 | 1400 | 2,5M | 3/4" | 3/4" | 3/4" | SI |

( ) UPON REQUEST IT IS AVAILABLE WITH DIFFERENT VOLTAGES AND 60 HZ FREQUENCY. COMPATIBLE FLUIDS: DIESEL, KEROSENE, PETROL, PETROL ALCOHOL MIXED MAX 15%, ASPEN 2/4

# PANTHER AC

## FEATURES

- COMPACT AND STURDY DESIGN
- READY TO USE
- EASY TO INSTALL
- INTEGRATED FILTER

The PIUSI PANTHER AC is a versatile self-priming rotary electric vane transfer pump available in three versions (56 - 72 - 90) particularly suitable for dispensers, fixed fuel transferring system and other industrial applications. It is equipped with a by-pass valve and an incorporated filter to stop impurities.

PANTHER 56 (flanges not included)

PANTHER 72 - PANTHER 90 (flanges included)

### PERFORMANCE

| UP TO 90 L/MIN | AC |
|---|---|
| FLOW RATE | POWER |

BIO diesel VERSION AVAILABLE

PANTHER 72 BIO

## PACKAGING

| CODE | WEIGHT | | PACKAGING | | | N. BOXES / EUROPALLET | |
|---|---|---|---|---|---|---|---|
| | KG | LBS | MM | INCH | PCS/BOX | ✈ | 🚢 |
| **PANTHER 56** | | | | | | | |
| F00730000 | 7,4 | 16,3 | 345X175X255 | - | 1 | 60 | 84 |
| 000731000 | 7,4 | 16,3 | 345X175X255 | - | 1 | 60 | 84 |
| 000733000 | 7,4 | 16,3 | 345X175X255 | - | 1 | 60 | 84 |
| **PANTHER 72** | | | | | | | |
| 000732000 | 7,9 | 17,4 | 345X175X255 | - | 1 | 60 | 84 |
| 000735000 | 7,9 | 17,4 | 345X175X255 | - | 1 | 60 | 84 |
| F00732B00 | 7,9 | 17,4 | 345X175X255 | - | 1 | 60 | 84 |
| **PANTHER 90** | | | | | | | |
| F0073302A | 9,007 | 19,9 | 345X175X255 | - | 1 | 60 | 84 |

ANY BIODIESEL | AIR | ANTIFREEZE | AdBlue® | BIODIESEL | DIESEL | FOOD | GASOLINE | GREASE | KEROSENE | OIL | WATER | WINDSCREEN

## CHART

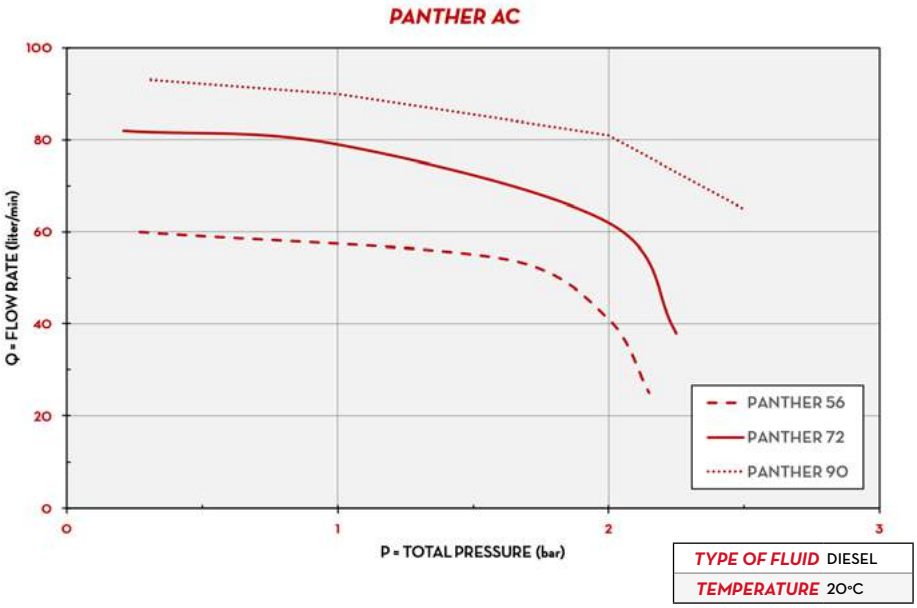


| | |
|---|---|
| TYPE OF FLUID | DIESEL |
| TEMPERATURE | 20°C |

## IN THE BOX

- PANTHER AC PUMP
- INSTRUCTION MANUAL

## DETAILS

VANE ROTOR

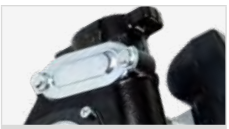

INTEGRATED FILTER

## DIMENSIONS

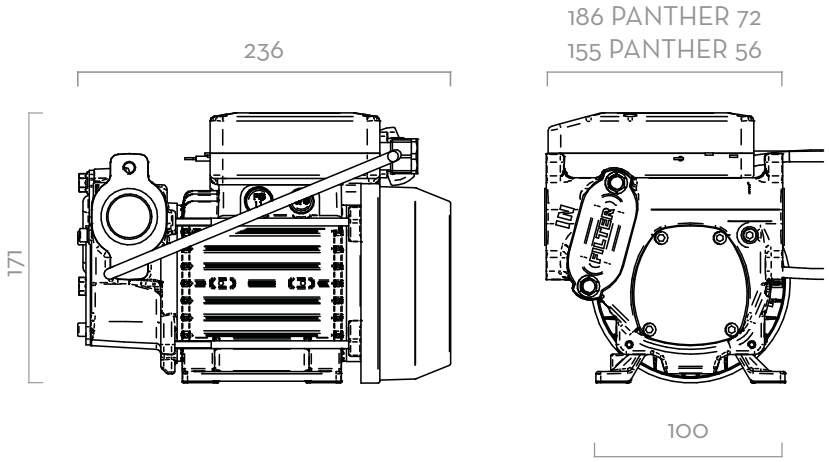


*Dimensions expressed in millimeters*

## MATERIALS

- BODY: CAST IRON
- ROTOR: SINTERED STEEL
- VANES: TECHNOPOLYMER
- SHAFT: STEEL

PUMP ← TANK

- MAX 6M (20FT),
- SUCTION HOSE Ø 1" MIN,
- MAX SUCTION HEIGHT:
  - 2M (7FT) W/O NON RETURN VALVE
  - 4M (14FT) W NON RETURN VALVE

## TECHNICAL DATA

| CODE | DESCRIPTION | FLUIDS TYPE | FLOW RATE L/MIN | FLOW RATE GPM | VOLTAGE SINGLEPHASE MOTOR V./HZ | VOLTAGE THREEPHASE MOTOR V./HZ | VOLTAGE POWER WATT | VOLTAGE AMP. MAX. | RPM | INLET OUTLET BSP | FLANGE CON-NECTION | BYPASS VALVE | INLET FILTER | DUTY CYCLE MINUTE |
|---|---|---|---|---|---|---|---|---|---|---|---|---|---|---|
| **PANTHER 56** | | | | | | | | | | | | | | |
| F00730000 | PANTHER 56 230/50 | D | 56 | 15 | 230/50 | - | 350 | 3 | 2900 | 1" | - | YES | YES | - |
| 000731000 | PANTHER 56 230/60 | D | 70 | 18 | 230/60 | - | 500 | 3,9 | 3400 | 1" | - | YES | YES | - |
| 000733000 | PANTHER 56 400/50 | D | 56 | 15 | - | 400/50 | 500 | 1,3 | 2900 | 1" | - | YES | YES | - |
| **PANTHER 72** | | | | | | | | | | | | | | |
| 000732000 | PANTHER 72 230/50 | D | 72 | 19 | 230/50 | - | 500 | 4,2 | 2900 | 1" | YES | YES | YES | - |
| 000735000 | PANTHER 72 400/50 | D | 72 | 19 | - | 400/50 | 500 | 1,6 | 2900 | 1" | YES | YES | YES | - |
| F00732B00 | PANTHER 72 230V/50HZ B100 | D | 72 | 19 | 230/50 | - | 500 | 4,2 | 2900 | 1" | YES | YES | YES | - |
| **PANTHER 90** | | | | | | | | | | | | | | |
| F0073302A | PANTHER 90 230/50 | D | 90 | 23,8 | 230/50 | - | 700 | 4,9 | 2900 | 1" | YES | YES | YES | 30 |

UPON REQUEST IT IS AVAILABLE WITH DIFFERENT VOLTAGES AND 60 HZ FREQUENCY.
(*) EXCEPT PANTHER 90

# VISCOMAT VANE

## FEATURES

- VERSATILITY
- MOBILE AND READY TO USE
- MULTIPURPOSE PUMP
- ADJUSTABLE BYPASS

The PIUSI VISCOMAT VANE is an electric vane pump suitable for all those applications where it is necessary to apply a transfer system with high suction capacity in order to transfer fluids with low viscosity up to 500 cSt. The pump is fitted with an asynchronous and self-ventilating motor, closed and available in different voltages and frequencies in order to adapt to any working condition.

### PERFORMANCE

| | |
|---|---|
| UP TO 50 L/MIN | AC |
| FLOW RATE | POWER |
| UP TO 500 CST | |
| VISCOSITY | |

VISCOMAT VANE

### PACKAGING

| CODE | WEIGHT | | PACKAGING | | | N. BOXES / EUROPALLET | |
|---|---|---|---|---|---|---|---|
| | KG | LBS | MM | INCH | PCS/BOX | ✈ | 🚢 |
| **VISCOMAT 70** | | | | | | | |
| F0033490A | 14,1 | 31,1 | 355X185X285 | - | 1 | 60 | 72 |
| F0033190A | 14,1 | 31,1 | 350X200X280 | - | 1 | 60 | 72 |
| **VISCOMAT 90** | | | | | | | |
| F00303M00 | 14,1 | 31,1 | 350X200X280 | - | 1 | 60 | 72 |
| 000303000 | 14,1 | 31,1 | 350X200X280 | - | 1 | 60 | 72 |

ANY BIODIESEL · AIR · ANTIFREEZE · AdBlue® · BIODIESEL · DIESEL · FOOD · GASOLINE · GREASE · KEROSENE · OIL · WATER · WINDSCREEN

## CHART

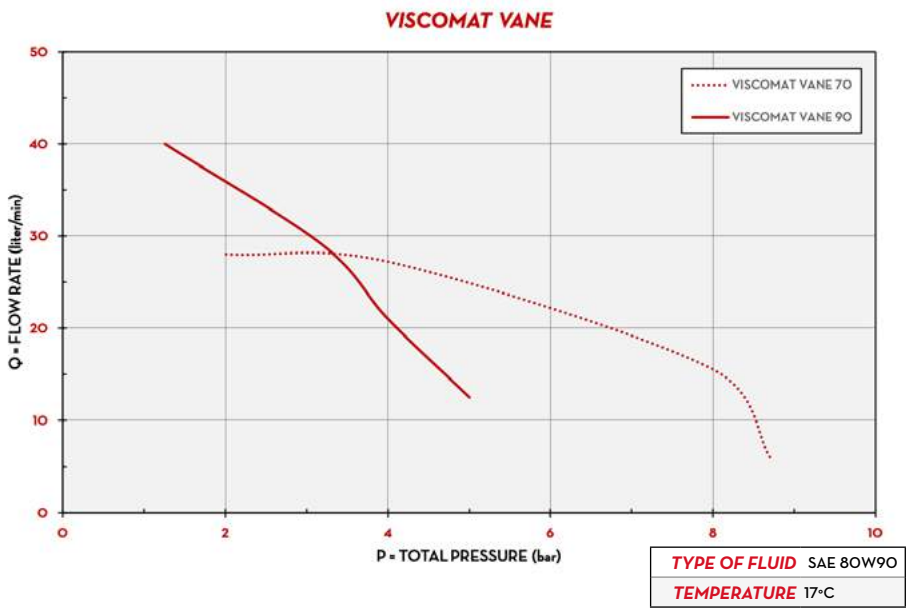


| | |
|---|---|
| TYPE OF FLUID | SAE 80W90 |
| TEMPERATURE | 17°C |

## IN THE BOX

- VISCOMAT VANE PUMP
- INSTRUCTION MANUAL

## DETAILS

ON/OFF SWITCH

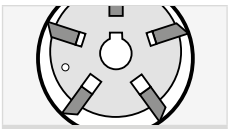
VANE ROTOR

ADJUSTABLE BYPASS VALVE

## MATERIALS

- BODY: CAST IRON
- ROTOR: SINTERED STEEL
- VANES: TECHNOPOLYMER
- SHAFT: STEEL

## DIMENSIONS

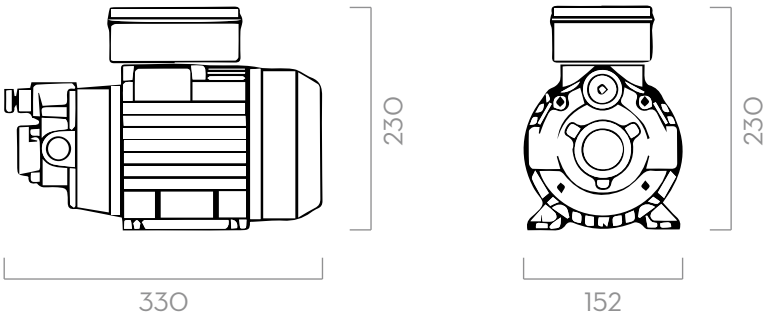


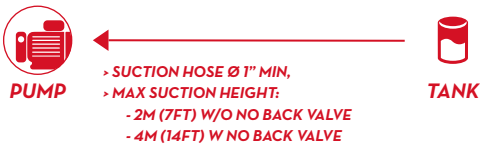


*Dimensions expressed in millimeters*

## TECHNICAL DATA

| CODE | DESCRIPTION | FLUIDS TYPE | FLOW RATE L/MIN | FLOW RATE GPM | PRESSURE BAR | PRESSURE PSI | VOLTAGE SINGLEPHASE MOTOR V./HZ | VOLTAGE THREEPHASE MOTOR V./HZ | VOLTAGE POWER WATT | VOLTAGE AMP. MAX. | RPM | INLET OUTLET BSP | ADJUSTABLE BYPASS VALVE |
|---|---|---|---|---|---|---|---|---|---|---|---|---|---|
| **VISCOMAT 70** | | | | | | | | | | | | | |
| F0033490A | VISCOMAT 70 M 230/50-60 | D O B | 25 | 7 | 6 | 85 | 230/50-60 | - | 1200/1100 | 5,5 - 5,1 | 1470/1650 | 1" | YES |
| F0033190A | VISCOMAT 70 T 400/50-60 | D O B | 25 | 7 | 6 | 85 | - | 400/50 - 400/60 | 650/1000 | 2,2 - 3,1 | 1450/1750 | 1" | YES |
| **VISCOMAT 90** | | | | | | | | | | | | | |
| F00303M00 | VISCOMAT 90 M 230/50-60 | D O B | 50 | 13 | 5 | 71 | 230/50-60 | - | 1350/1600 | 6,2 - 4,9 | 1400/1600 | 1" | NO |
| 000303000 | VISCOMAT 90 T 400/50 | D O B | 50 | 13 | 5 | 71 | - | 400/50 | 2000 | 5 | 1450 | 1" | YES |

UPON REQUEST IT IS AVAILABLE WITH DIFFERENT VOLTAGE AND FREQUENCY

# E80 / E120

## FEATURES

- VERSATILITY
- STURDY STRUCTURE
- LONG LASTING
- REASY TO USE
- THERMAL PROTECTION

The PIUSI E80 and E120 are self-priming rotary electric vane pumps, com-pact and easy to install, suitable to meet all those use requirements needing a high-performance and long lasting product. The sturdy structure along with the thermal protection and the top-quality components allow its use at low working temperatures.

E80/E120

### PERFORMANCE

| UP TO 100 L/MIN | AC |
|---|---|
| FLOW RATE | POWER |

VERSION AVAILABLE

E120 BIO

### PACKAGING

| CODE | WEIGHT | | PACKAGING | | | N. BOXES / EUROPALLET | |
|---|---|---|---|---|---|---|---|
| | KG | LBS | MM | INCH | PCS/BOX | ✈ | 🚢 |
| **E80** | | | | | | | |
| 000305000 | 10,26 | 22,6 | 355X185X285 | - | 1 | 60 | 72 |
| 000307000 | 10,26 | 22,6 | 355X185X285 | - | 1 | 60 | 72 |
| **E120** | | | | | | | |
| 000326000 | 13,25 | 29,2 | 355X185X285 | - | 1 | 60 | 72 |
| 000312000 | 13,25 | 29,2 | 355X185X285 | - | 1 | 60 | 72 |
| F00326B00 | 13,25 | 29,2 | 355X185X285 | - | 1 | 60 | 72 |

ANY BIODIESEL | AIR | ANTIFREEZE | AdBlue® | BIODIESEL | DIESEL | FOOD | GASOLINE | GREASE | KEROSENE | OIL | WATER | WINDSCREEN

## CHART

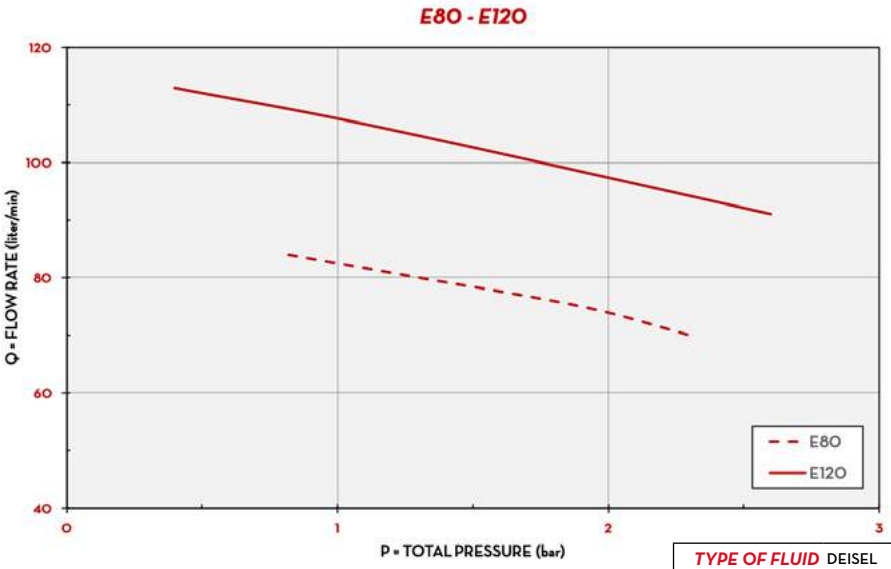


| | |
|---|---|
| TYPE OF FLUID | DEISEL |
| TEMPERATURE | 15°C |

## IN THE BOX

- E80/E120 PUMP
- FLANGED CONNECTION
- INSTRUCTION MANUAL

## DETAILS

VANE ROTOR

FLANGED CONNECTION

## DIMENSIONS

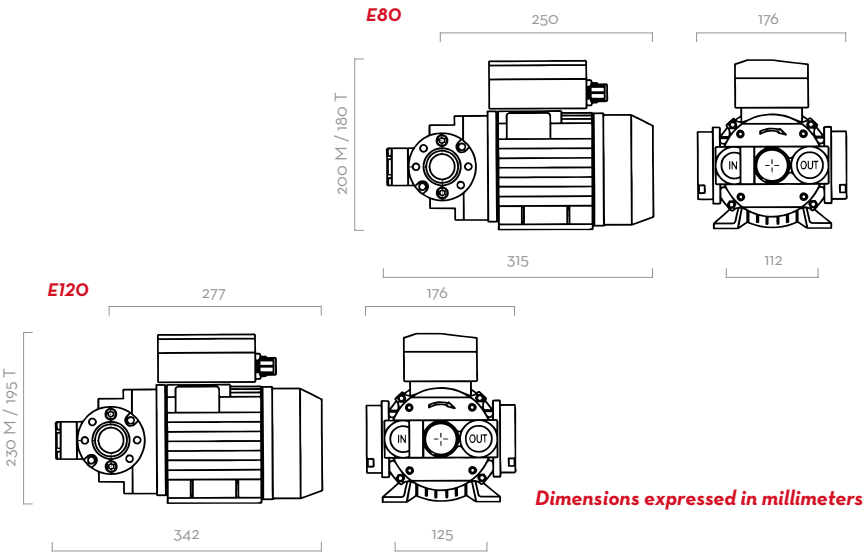


*Dimensions expressed in millimeters*

## MATERIALS

- BODY: CAST IRON
- ROTOR: SINTERED STEEL
- VANES: ACETAL RESIN
- SEAL: VITON
- SHAFT: STEEL

PUMP ← TANK

- MAX 6M (20FT),
- SUCTION HOSE Ø 1" MIN,
- MAX SUCTION HEIGHT:
  - 2M (7FT) W/O NON RETURN VALVE
  - 4M (14FT) W NON RETURN VALVE

## TECHNICAL DATA

| CODE | DESCRIPTION | FLUIDS TYPE | FLOW RATE L/MIN | FLOW RATE GPM | VOLTAGE SINGLEPHASE MOTOR V./HZ | VOLTAGE THREEPHASE MOTOR V./HZ | VOLTAGE POWER WATT | VOLTAGE AMP. MAX. | RPM | INLET OUTLET BSP | FLANGE CONNECTION | BYPASS VALVE | INLET FILTER |
|---|---|---|---|---|---|---|---|---|---|---|---|---|---|
| **E 80** | | | | | | | | | | | | | |
| 000305000 | E 80 M | D | 70 | 18 | 230/50 | - | 500 | 3,5 | 1400 | 1" | YES | YES | NO |
| 000307000 | E 80 T | D | 70 | 18 | - | 400/50 | 550 | 1,6 | 1450 | 1" | YES | YES | NO |
| **E 120** | | | | | | | | | | | | | |
| 000326000 | E 120 M | D | 100 | 26 | 230/50 | - | 750 | 5,7 | 1450 | 1" | YES | YES | NO |
| 000312000 | E 120 T | D | 100 | 26 | - | 400/50 460/60 | 750 - 1000 | 2 - 2,2 | 1450/1750 | 1" | YES | YES | NO |
| F00326B00 | E 120/M + INT. FLANGE D.80 B100 | D | 100 | 26 | 230/50 | - | 750 | 5,7 | 1450 | 1" | YES | YES | NO |

# E140

## FEATURES

- HIGH FLOW RATE
- HEAVY DUTY PUMP
- STURDY DESIGN

The E140 diesel transfer pump is versatile and suitable for different industries including automotive, agriculture, transportation, garages and construction. The E140 volumetric, self-priming vane pump for diesel transfer has a high seal and is reliable in conditions of use at low temperatures. With its solid and resistant body, the E140 is an easy to install diesel transfer pump, suitable for use in diesel dispensers and fixed fuel transfer systems, as well as other industrial applications. The compact cast iron structure makes the E140 electric pump the perfect system for performance and reliability.

### PERFORMANCE

| UP TO 140 L/MIN | AC VOLTAGE |
|---|---|
| FLOW RATE | POWER |

E140

### PACKAGING

| CODE | WEIGHT | | PACKAGING | | | N. BOXES / EUROPALLET | |
|---|---|---|---|---|---|---|---|
| | KG | LBS | MM | INCH | PCS/BOX | ✈ | 🚢 |
| F00395060 | 18 | 40 | 350X250X300 | 14X10X12 | 1 | 60 | 72 |
| F00395050A | 18 | 40 | 350X250X300 | 14X10X12 | 1 | 60 | 72 |

## CHART

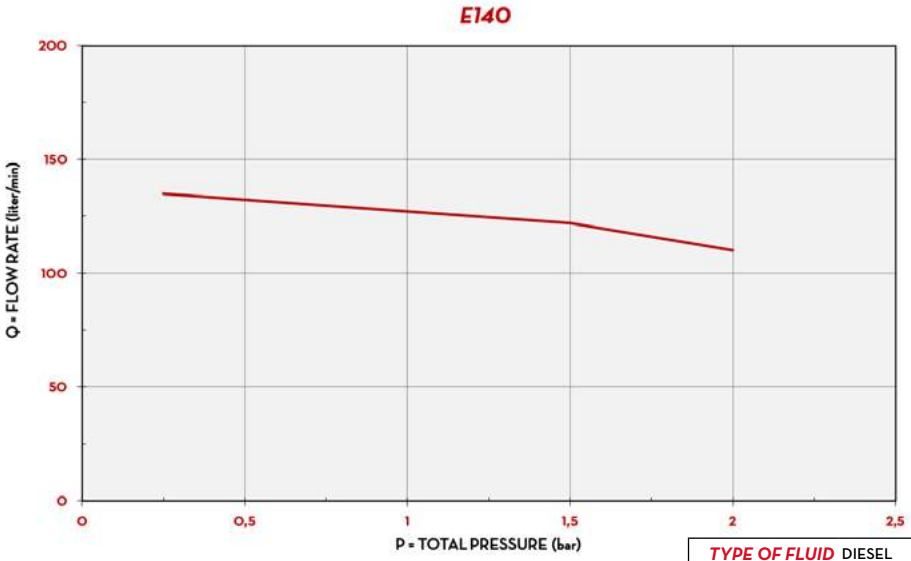


| | |
|---|---|
| TYPE OF FLUID | DIESEL |
| TEMPERATURE | 20°C |

## IN THE BOX

- E140 PUMP
- INSTRUCTION MANUAL

## DETAILS

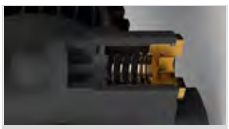

BYPASS VALVE

VANE ROTOR

## DIMENSIONS

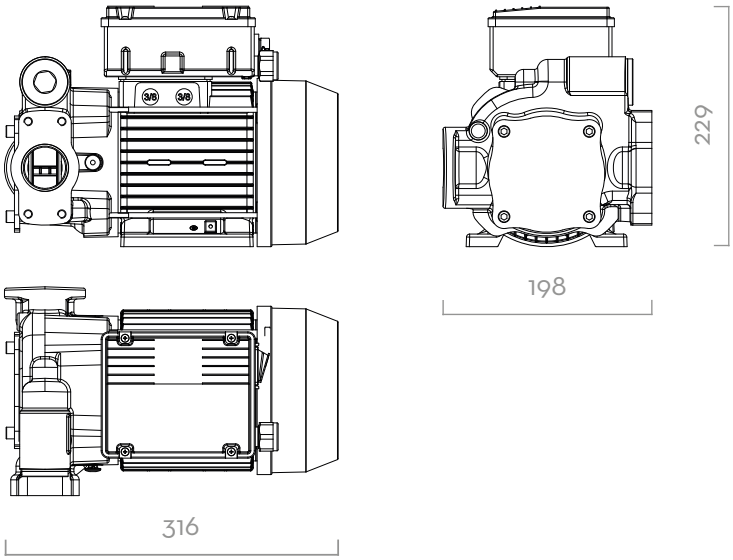


*Dimensions expressed in millimeters*

## MATERIALS

- BODY: CAST IRON
- ROTOR: SINTERED STEEL
- VANES: TECHNOPOLYMER
- SEAL: VITON
- SHAFT: STEEL

## TECHNICAL DATA

| CODE | DESCRIPTION | FLUIDS TYPE | FLOW RATE | | VOLTAGE | | | RPM | INLET | OUTLET |
|---|---|---|---|---|---|---|---|---|---|---|
| | | | L/MIN | GPM | AC VOLT/HZ | POWER WATT | AMP. MAX. | | BSP | |
| F0039506O | E 140 250/50 | D | 140 | 37 | 250/50 | 1180 | 5 | 1450 | 1" 1/4 | 1" |
| F0039505A | E 140 230/50 | D | 140 | 37 | 230/50 | 1150 | 5 | 1450 | 1" 1/4 | 1" |

# E300

## FEATURES

- HIGH-FLOW PUMP
- STURDY STRUCTURE
- HEAVY DUTY APPLICATION
- IP55

The PIUSI E300 is an electric pump with open impeller suitable for all applications in which high-flows are required. Thus, it is the ideal equipment for topping up and transferring diesel from drums. It comes with an incorporated check valve in the suction port to prevent the siphon effect while ensuring automatic re-priming.

### PERFORMANCE

| | |
|---|---|
| UP TO 500 L/MIN<br>FLOW RATE | AC CONTINUOUS DUTY<br>POWER |
| 1,7 BAR<br>MAX. PRESSURE | |

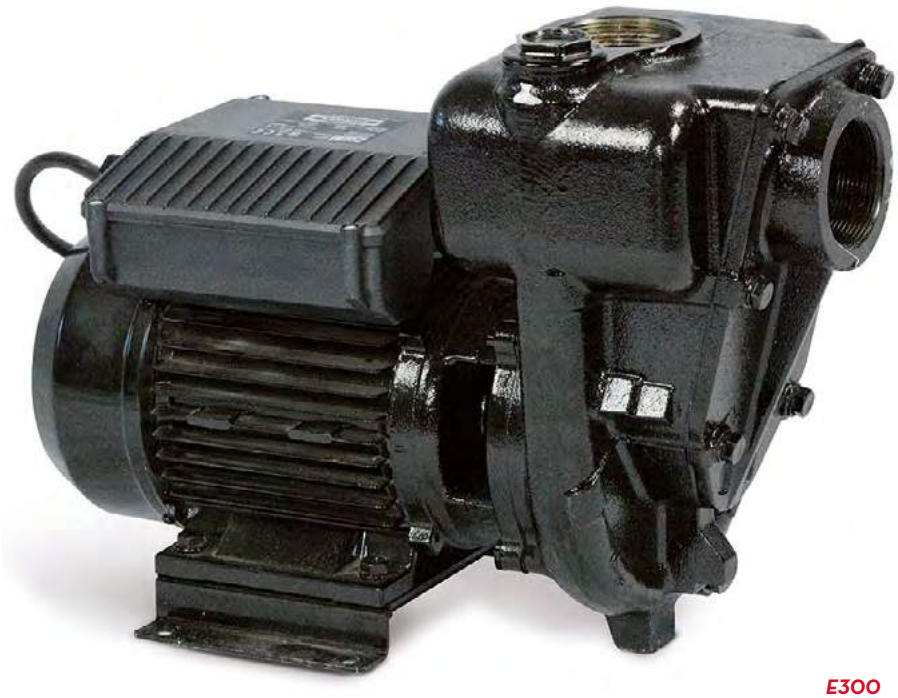

E300

### PACKAGING

| CODE | WEIGHT | | PACKAGING | | |
|---|---|---|---|---|---|
| | KG | LBS | MM | INCH | PCS/BOX |
| F00321000 | 27 | 59 | 220X420X330 | 8,7X16,5X13 | 1 |

## CHART

| | |
|---|---|
| TYPE OF FLUID | DIESEL |
| TEMPERATURE | 10°C |

## IN THE BOX

- E300 PUMP
- INSTRUCTION MANUAL

## DETAILS

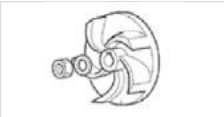

OPEN IMPELLER

2" IN/OUT CONNECTIONS

STEADY SUPPORT

## DIMENSIONS

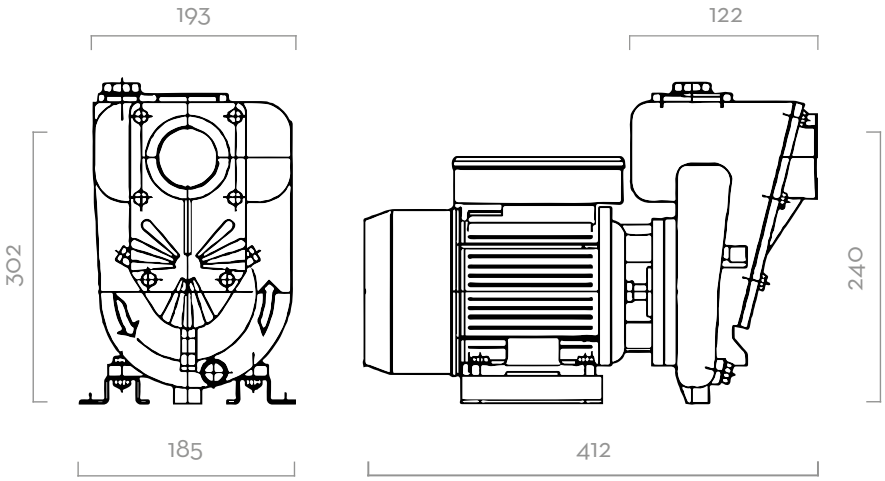


*Dimensions expressed in millimeters*

## MATERIALS

- BODY: CAST IRON
- OPEN IMPELLER: CAST IRON
- SEAL: VITON
- SHAFT: STEEL

## TECHNICAL DATA

| CODE | DESCRIPTION | FLUIDS TYPE | FLOW RATE | | VOLTAGE | | | RPM | INLET OUTLET |
|---|---|---|---|---|---|---|---|---|---|
| | | | L/MIN | GPM | AC VOLT/HZ | POWER WATT | AMP. MAX. | | BSP |
| F00321000 | E 300 | D | 500 | 130 | 230/50 | 1500 | 7 | 2580 | 2" |

# PIUSI 3000 SUPREME

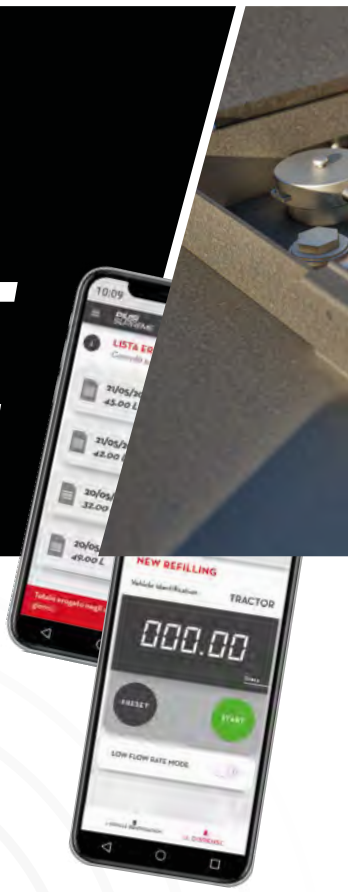


## READY FOR A NEW GENERATION OF REFUELLING PUMPS?

### THE PROBLEMS TYPICALLY ASSOCIATED WITH REFUELLING FROM TRANSPORTABLE TANKS

1. **Security:** is the pump operated by a simple ON button, making it susceptible to unauthorised fuel withdrawals?
2. **Unknown withdrawals:** are you in doubt about who has withdrawn fuel and when?
3. **Overheating:** does the pump overheat when dispensing fuel to vehicles with large fuel tanks?
4. **Failures or malfunctions:** has the pump suffered damage as a result of being connected to the wrong voltage?

### PIUSI 3000 SUPREME IS THE SOLUTION!

1. **Dedicated app –** Secure, controlled and traceable fuel access, only to authorised users in possession of a security PIN
2. **Flow Control Technology –** Automatically reduces the flow rate in the event of overheating. You can also reduce the flow rate manually, from an app, if you want to dispense fuel into small cans
3. **Multi-Battery Technology –** Multi-voltage power supply from 12V to 24V*, with protection in the event of connection with reversed polarity

* The Piusi 3000 Supreme does not have the ability to monitor the battery and does not provide any type of protection for it.

## 3 VERSIONS COVERING A FULL RANGE OF NEEDS

| | SITE DIMENSIONS | | |
|---|---|---|---|
| | 1 pump | | 2 or more pumps |
| | PIUSI SUPREME | PIUSI SUPREME PRO | B.SMART |
| Integrated flow control | ✓ | ✓ | ✓ |
| Login with security PIN | ✓ | ✓ | ✓ |
| Delivery time-out | ✓ | ✓ | ✓ |
| Preset function | ✓ | ✓ | ✓ |
| User Management | Up to 2 users | Up to 10 users | Up to 500 users for each dispenser, unlimited in the system |
| Dispense history | Last 20 | Latest 100, downloadable with CSV file | Filterable report by date |
| Dispense calendar | - | ✓ in the app | ✓ in the webapp with filterable report by date |
| Total dispensed | - | ✓ in the last 30 days | ✓ Filterable report by date |
| In-app reminder/To do list | - | ✓ | - |
| Level indicator managemehnt | - | - | ✓ with the TANK WATCHDOG add-on |
| Consumption management of vehicles and users | - | - | ✓ with the FUEL ECONOMY add-on |
| Geolocation of dispenses | - | - | ✓ with the MAPLY add-on |

It is possible to upgrade to the higher version even after purchasing the pump

## SOFTWARE UPGRADE (ONE TIME FEE)

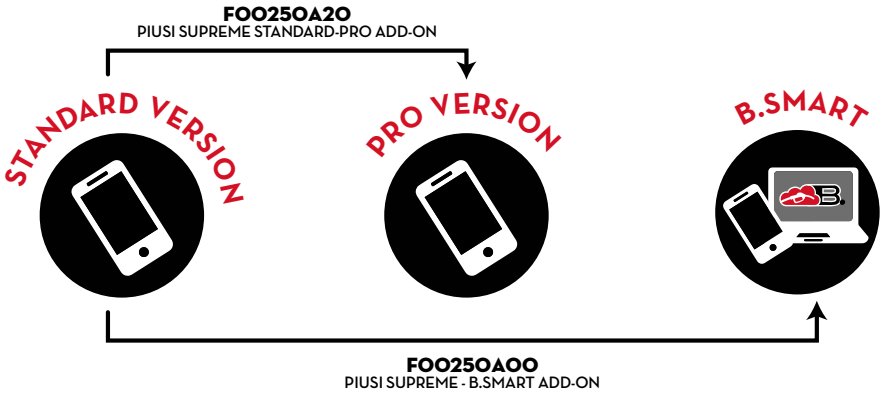


| ADD-ON | |
|---|---|
| CODE | DESCRIPTION |
| F00250A20 | PIUSI SUPREME STANDARD-PRO ADD-ON |
| F00250A00 | PIUSI SUPREME - B.SMART ADD-ON |

# PIUSI 3000 SUPREME

## FEATURES

- VOLTAGE FROM 12 TO 24V*
- BLUETOOTH CONNECTION
- TOTAL CONTROL VIA APP
- VIBRATION RESISTANCE
- LOW NOISE
- COMPATIBLE WITH DIESEL UP TO B20 - HVO/XTL
- MAX. PRESSURE 1,5 BAR
- IP55

The **PIUSI 3000 SUPREME** is a highly innovative device designed to offer full pump control and management from a smartphone app, thus helping users fill up with diesel from mobile tanks quickly and safely.

The PIUSI 3000 SUPREME combines new digital technologies with PIUSI's long and proven track-record in the design of fluid management systems such as pumps and flow meters. This new pump is designed to dispense diesel, measure the volume dispensed, manage operator access and solve the problems typically faced by users of transportable tanks.

### PERFORMANCE

| | |
|---|---|
| UP TO 50 L/MIN | FROM 12V TO 24V* |
| FLOW RATE | VOLTAGE |
| CONTINUOUS DUTY | ±0,5% |
| DUTY CYCLE | ACCURACY |

* The Piusi 3000 Supreme does not have the ability to monitor the battery and does not provide any type of protection for it.

PIUSI 3000 SUPREME

### PACKAGING

| CODE | WEIGHT | | PACKAGING | | |
|---|---|---|---|---|---|
| | KG | LBS | MM | INCH | PCS/BOX |
| F00250H00 | 5,4 | 11,9 | 270X190X180 | - | 1 |
| F00250V00 | 5,4 | 11,9 | 270X190X180 | - | 1 |
| F00250D00 | 7,4 | 16,3 | 300X300X180 | - | 1 |
| F00250K00 | 10 | 22 | 490X390X310 | - | 1 |
| F00250D10 | 11,5 | 25,3 | 490X390X310 | - | 1 |

ANY BIODIESEL | AIR | ANTIFREEZE | AdBlue® | BIODIESEL | **D** DIESEL | FOOD | GASOLINE | GREASE | KEROSENE | OIL | WATER | WINDSCREEN

BASE BRACKET KIT

2" DIRECT MOUNT KIT

## IN THE BOX

- PUMPS
- SUCTION FILTER (BASE BRACKET KIT)
- DELIVERY HOSE (BASE BRACKET KIT & 2" DIRECT MOUNT)
- AUTOMATIC NOZZLE A60
- ELECTRIC CABLE 4M
- OIL & FUEL FILTER (2" DIRECT MOUNT)
- 2" SUCTION CONNECTION (2" DIRECT MOUNT KIT )
- BASE BRACKET (BASE BRACKET KIT)
- NOZZLE HOLDER (2" DIRECT MOUNT KIT )
- ACCESS KEY (1PZ)
- INSTRUCTION MANUAL

## DETAILS

BENDING PROTECTION

ELECTRIC CABLE

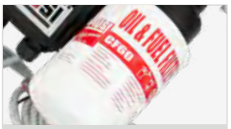

OIL & FUEL FILTER

AUTOMATIC NOZZLE A60

## DIMENSIONS

### BASE BRACKET KIT

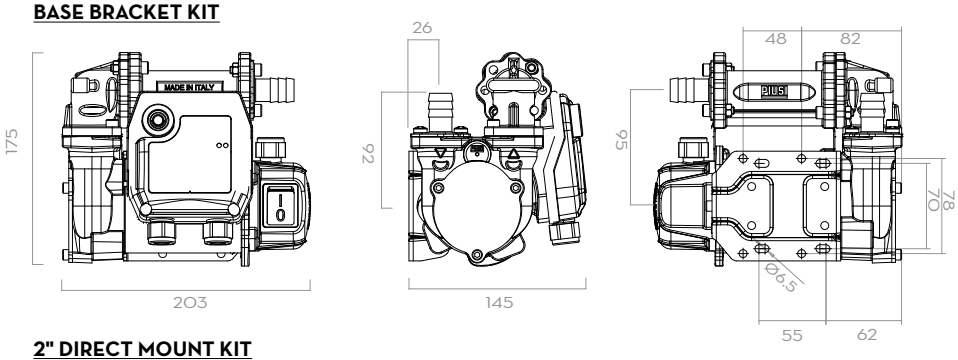


### 2" DIRECT MOUNT KIT

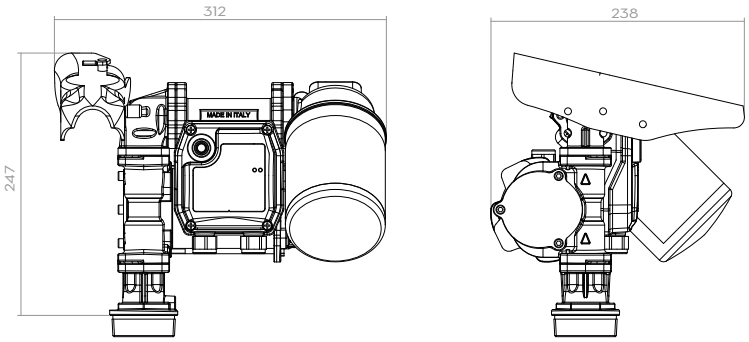


*Dimensions expressed in millimeters*

## COMPONENTS

- BODY: CAST IRON
- ROTOR: SINTERED STEEL
- VANES: ACETAL RESIN
- SEAL: NBR
- SHAFT: STEEL

## ACCESSORIES

- AUTOMATIC NOZZLE A60 + HOOK COD. F00603S00 (2" DIRECT MOUNT KIT & BASE BRACKET KIT)
- DIESEL HOSE 4M (COD. F24103000)

## TECHNICAL DATA

| CODE | DESCRIPTION | FLUIDS TYPE | FLOW RATE | | VOLTAGE | | | RPM | DUTY CYCLE CONTINUOUS | FUSES CAPACITY | HOSE | | SPIN ON FILTER | NOZZLE |
|---|---|---|---|---|---|---|---|---|---|---|---|---|---|---|
| | | | L/MIN | GPM | DC VOLT | POWER WATT | AMP. MAX. | | | AMPERE | LENG. | Ø | | |
| F00250H00 | PIUSI 3000 SUPREME PUMP ONLY B.O. | D | 50 | 13 | FROM 12 TO 24 | 200W | 16A/8A | 2700 | YES | 25A | - | - | - | - |
| F00250V00 | PIUSI 3000 SUPREME PUMP ONLY B.V. | D | 50 | 13 | FROM 12 TO 24 | 200W | 16A/8A | 2700 | YES | 25A | - | - | - | - |
| F00250D00 | PIUSI 3000 SUPREME PUMP ONLY DRUM | D | 50 | 13 | FROM 12 TO 24 | 200W | 16A/8A | 2700 | YES | 25A | - | - | YES | - |
| F00250K00 | PIUSI 3000 SUPREME BASE BRACKET KIT | D | 50 | 13 | FROM 12 TO 24 | 200W | 16A/8A | 2700 | YES | 25A | 4MT | 3/4" | - | A60 |
| F00250D10 | PIUSI 3000 SUPREME 2" DIRECT MOUNT KIT | D | 50 | 13 | FROM 12 TO 24 | 200W | 16A/8A | 2700 | YES | 25A | 4MT | 3/4" | YES | A60 |

# BP3000

## FEATURES

- VERSATILE
- ON BOARD APPLICATION
- EMC COMPATIBILITY
- VIBRATION RESISTANT
- IP55

The PIUSI BP3000 is a long-lasting, self-priming vane pump. Powerful, versatile and compact, it is equipped with a built-in by-pass valve. Available in both 12V and 24V versions, it represents the core of the PIUSI range of pumps for on-board applications, particularly in the off-road and earthmoving machinery industry.

BP3000 INLINE

BP3000

BP3000 BIO

BIO diesel VERSION AVAILABLE

### PERFORMANCE

| | |
|---|---|
| UP TO 50 L/MIN — FLOW RATE | DC VOLTAGE — POWER |
| 30 MIN — DUTY CICLE | UP TO 4MT — SELF-PRIMING |

### PACKAGING

| CODE | WEIGHT | | PACKAGING | | |
|---|---|---|---|---|---|
| | KG | LBS | MM | INCH | PCS/BOX |
| F00342000 | 3,5 | 7,9 | 200X120X140 | 7,9X4,7X5,5 | 1 |
| F00347000 | 3,5 | 7,9 | 200X120X140 | 7,9X4,7X5,5 | 1 |
| F00357000 | 3,5 | 7,9 | 200X120X140 | 7,9X4,7X5,5 | 1 |
| F00357500 | 3,5 | 7,9 | 200X120X140 | 7,9X4,7X5,5 | 1 |
| F00358000 | 3,5 | 7,9 | 200X120X140 | 7,9X4,7X5,5 | 1 |
| F00358500 | 3,5 | 7,9 | 200X120X140 | 7,9X4,7X5,5 | 1 |
| F00342B00 | 3,5 | 7,9 | 200X120X140 | 7,9X4,7X5,5 | 1 |

ANY BIODIESEL | AIR | ANTIFREEZE | AdBlue® | BIODIESEL | DIESEL | FOOD | GASOLINE | GREASE | KEROSENE | OIL | WATER | WINDSCREEN

## CHART

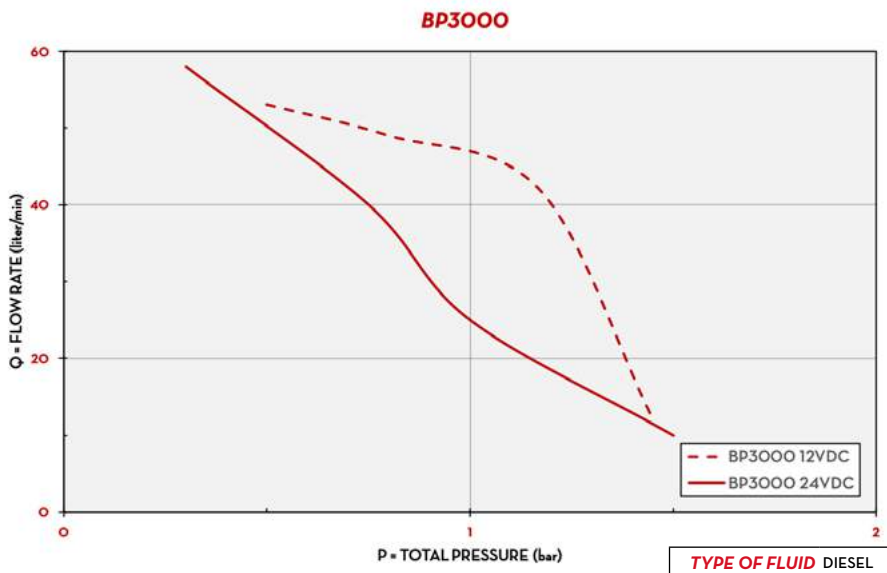


| | |
|---|---|
| TYPE OF FLUID | DIESEL |
| TEMPERATURE | 20°C |

## IN THE BOX

- BP3000 PUMP
- INSTRUCTION MANUAL

## DETAILS

VANE ROTOR

IN-LINE VERSION AVAILABLE

CONNECTION KIT

## DIMENSIONS

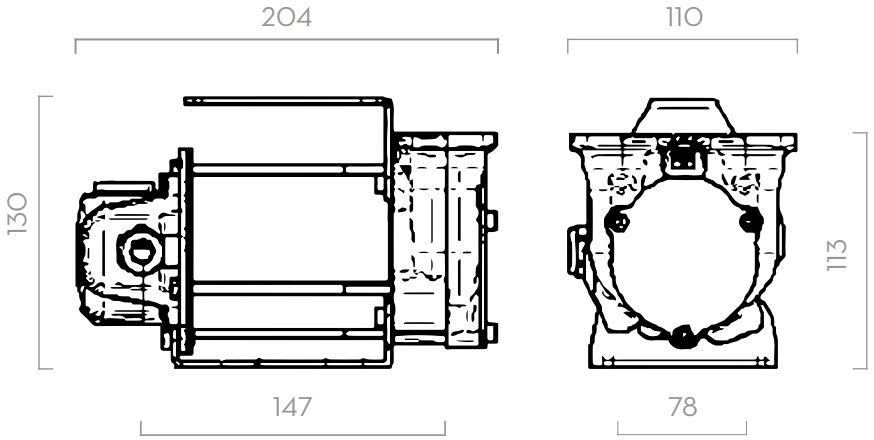


*Dimensions expressed in millimeters*

## MATERIALS

- BODY: CAST IRON
- ROTOR: SINTERED STEEL
- VANES: ACETAL RESIN
- SEAL: NBR
- SHAFT: STEEL

PUMP ← TANK

- MAX 6M (20FT),
- SUCTION HOSE Ø 1" MIN,
- MAX SUCTION HEIGHT:
  - 2M (7FT) W/O NON RETURN VALVE
  - 4M (14FT) W NON RETURN VALVE

## TECHNICAL DATA

| CODE | DESCRIPTION | FLUIDS TYPE | FLOW RATE | | VOLTAGE | | | DUTY CYCLE | RPM | THREADED PORTS BSP | MAX WORKING PRESSURE BAR |
|---|---|---|---|---|---|---|---|---|---|---|---|
| | | | L/MIN | GPM | DC VOLT | POWER WATT | AMP. MAX. | MINUTES | | | |
| F00342000 | BP3000 12V | D | 50 | 13 | 12 | 300 | 24 | 30 | 2900 | - | 1,5 |
| F00347000 | BP3000 24V | D | 50 / 30 | 13 / 6 | 24/12 | 310 / 80 | 13 / 6,5 | 30 | 2900 / 1500 | - | 1,5 |
| F00357000 | BP3000 12V INLINE | D | 50 | 13 | 12 | 300 | 24 | 30 | 2900 | - | 1,5 |
| F00357500 | BP3000 12V INLINE 3/4' BSP | D | 50 | 13 | 12 | 300 | 24 | 30 | 2900 | 3/4" | 1,5 |
| F00358000 | BP3000 24V INLINE | D | 50 / 30 | 13 / 6 | 24/12 | 310 / 80 | 13 / 6,5 | 30 | 2900 / 1500 | - | 1,5 |
| F00358500 | BP3000 24V INLINE 3/4' BSP | D | 50 / 30 | 13 / 6 | 24/12 | 310 / 80 | 13 / 6,5 | 30 | 2900 / 1500 | 3/4" | 1,5 |
| F00342B00 | BP3000 12V B100 | D | 50 | 13 | 12 | 300 | 24 | 30 | 2900 | - | 1,5 |

# PANTHER DC

## FEATURES

- STURDY STRUCTURE
- EASY TO INSTALL
- COMPACT DESIGN
- IP55

The PANTHER DC is a rotary, self-priming vane pump suitable for all applications in which important flow rates are required. This equipment is fitted with an incorporated filter (500µ) and by-pass valve. The 24/12 V version can be used with both voltages.

PANTHER DC

### PERFORMANCE

| | |
|---|---|
| UP TO 70 L/MIN<br>FLOW RATE | 12/24V VOLTAGE<br>POWER |
| 30 MIN<br>DUTY CICLE | |

### PACKAGING

| CODE | WEIGHT | | PACKAGING | | |
|---|---|---|---|---|---|
| | KG | LBS | MM | INCH | PCS/BOX |
| F0034000B | 7,5 | 16,5 | 345X175X255 | 13,6X6,9X10 | 1 |
| F0034001C | 7,5 | 16,5 | 345X175X255 | 13,6X6,9X10 | 1 |
| F0034100C | 7,5 | 16,5 | 345X175X255 | 13,6X6,9X10 | 1 |
| F0034101C | 7,5 | 16,5 | 345X175X255 | 13,6X6,9X10 | 1 |
| F0034116C | 7,5 | 16,5 | 345X175X255 | 13,6X6,9X10 | 1 |

## CHART

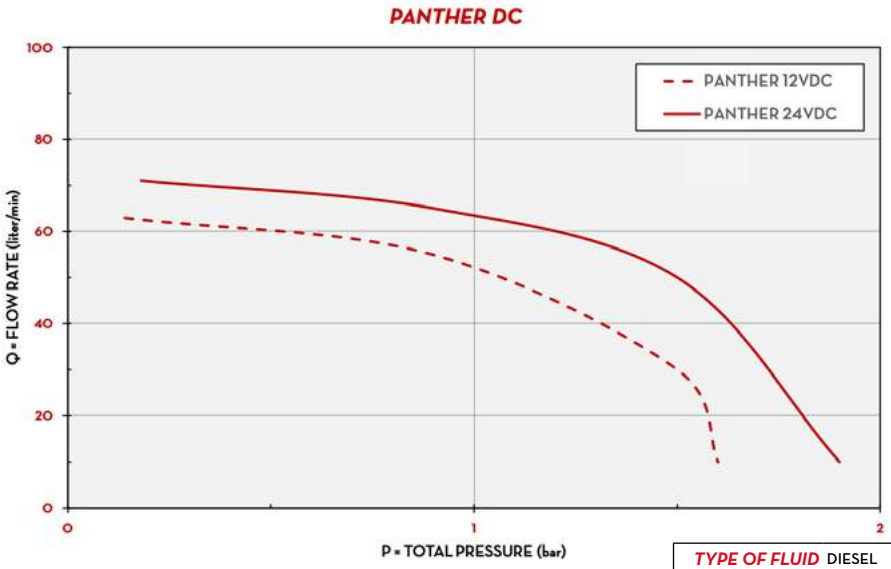


| | |
|---|---|
| TYPE OF FLUID | DIESEL |
| TEMPERATURE | 22°C |

## IN THE BOX

- PANTHER DC PUMP
- INSTRUCTION MANUAL

## DETAILS

ON/OFF SWITCH

1" BSP THREADED

INTEGRATED FILTER

## DIMENSIONS

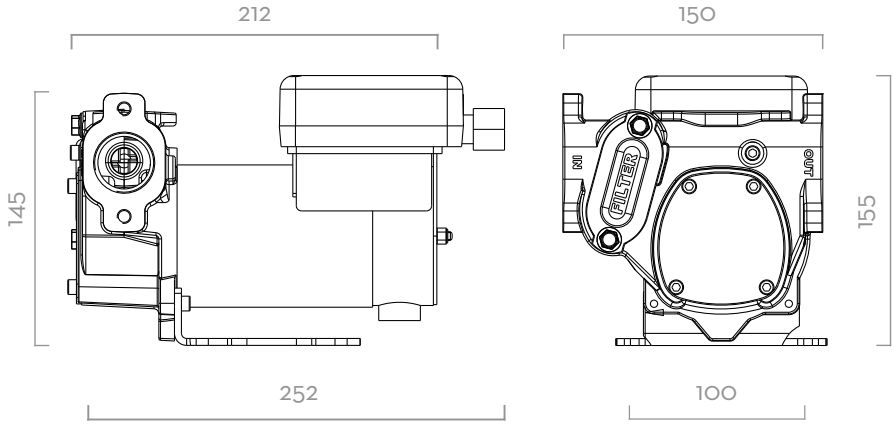


*Dimensions expressed in millimeters*

## MATERIALS

- BODY: CAST IRON
- ROTOR: SINTERED STEEL
- VANES: ACETAL RESIN
- MOTOR: ALUMINIUM CASING

PUMP → TANK

- MAX 6M (20FT),
- SUCTION HOSE Ø 1" MIN,
- MAX SUCTION HEIGHT:
  - 2M (7FT) W/O NON RETURN VALVE
  - 4M (14FT) W NON RETURN VALVE

## TECHNICAL DATA

| CODE | DESCRIPTION | FLUIDS TYPE | FLOW RATE | | VOLTAGE | | | DUTY CICLE | RPM | OUTLET |
|---|---|---|---|---|---|---|---|---|---|---|
| | | | L/MIN | GPM | DC VOLT | POWER WATT | AMP. MAX. | MINUTES | | BSP |
| F0034000B | PANTHER DC 12V | D | 56 | 14,8 | 12 | 300 | 35 | 30 | 2900 | 1" |
| F0034001C | PANTHER DC 12V W/CABLE 2MT W/PLIERS | D | 56 | 14,8 | 12 | 300 | 35 | 30 | 2900 | 1" |
| F0034100C | PANTHER DC 24/12V | D | 70 / 35 | 18,5 / 9,2 | 24/12 | 420 / 150 | 25 / 16 | 30 | 3600 / 1800 | 1" |
| F0034101C | PANTHER DC 12/24V W/CABLE 2MT W/CLIPS | D | 70 / 35 | 18,5 / 9,2 | 24/12 | 420 / 150 | 25 / 16 | 30 | 3600 / 1800 | 1" |
| F0034116C | PANTHER DC 12/24V W/CABLE 4MT W/CLIPS | D | 70 / 35 | 18,5 / 9,2 | 24/12 | 420 / 150 | 25 / 16 | 30 | 3600 / 1800 | 1" |

# BIPUMP

## FEATURES

- STURDY STRUCTURE
- COMPACT DESIGN
- HEAVY DUTY
- HIGH RELIABILITY
- IP55

The PIUSI BIPUMP is a diesel transfer pump, available both in 12 and 24 V versions, designed to meet the needs of those who are looking for a long-lasting quality, high flow rate pump, applicable to different industries. It is easy to install and is suitable for being applied on diesel dispensers and fixed fuel transfer systems, as well as other applications.

### PERFORMANCE

| | |
|---|---|
| UP TO 85 L/MIN | 12/24V VOLTAGE |
| FLOW RATE | POWER |
| 30 MIN | |
| DUTY CICLE | |

BIPUMP

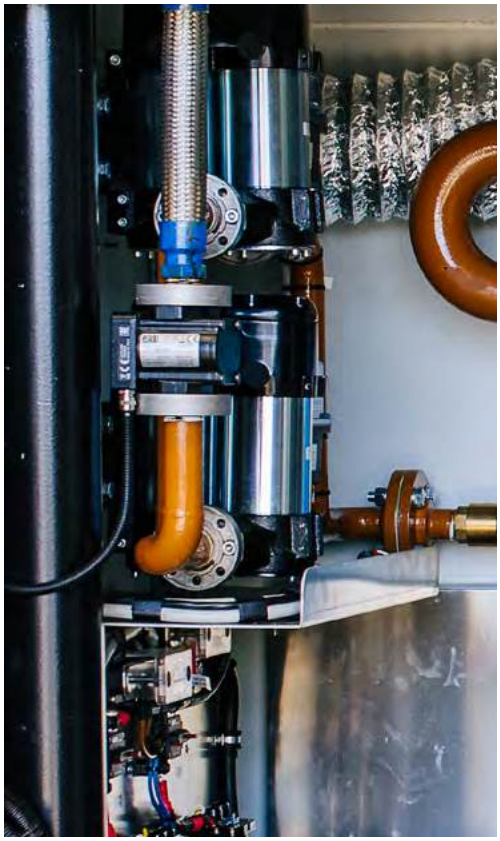

### PACKAGING

| CODE | WEIGHT | | PACKAGING | | | N. BOXES / EUROPALLET | |
|---|---|---|---|---|---|---|---|
| | KG | LBS | MM | INCH | PCS/BOX | ✈ | 🚢 |
| F00363A0A | 12,7 | 28,1 | 345X175X255 | - | 1 | 60 | 72 |
| F00363B0A | 12,6 | 27,9 | 345X175X255 | - | 1 | 60 | 72 |
| F0036301A | 9,9 | 21,8 | 345X175X255 | - | 1 | 60 | 72 |
| F0036302A | 9,9 | 21,8 | 345X175X255 | | 1 | 60 | 72 |
| F0036303A | 9,9 | 21,8 | 345X175X255 | - | 1 | 60 | 72 |
| F0036304A | 9,9 | 21,8 | 345X175X255 | - | 1 | 60 | 72 |
| F0036321A | 12,36 | 27,2 | 345X175X255 | - | 1 | 60 | 72 |

## CHART

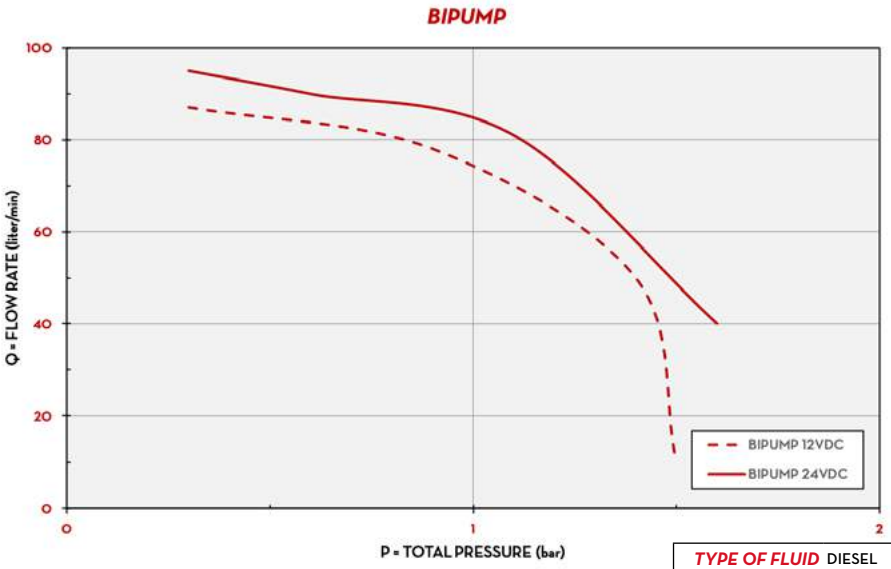


| | |
|---|---|
| TYPE OF FLUID | DIESEL |
| TEMPERATURE | 15°C |

## IN THE BOX

- BIPUMP UNIT
- FLANGED CONNECTIONS
- INSTRUCTION MANUAL

## DETAILS

ON/OFF SWITCH

FLANGED CONNECTIONS

## DIMENSIONS

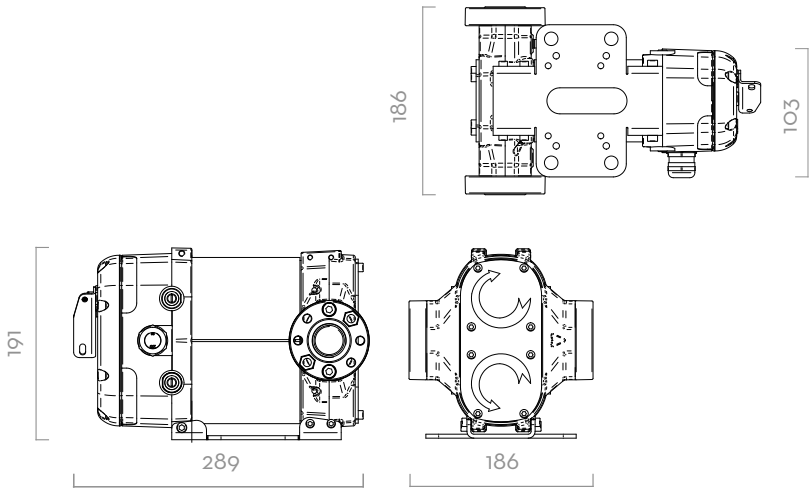


*Dimensions expressed in millimeters*

## MATERIALS

- BODY: CAST IRON
- ROTOR: SINTERED STEEL
- VANES: ACETAL RESIN
- SEAL: NBR
- SHAFT: STEEL

PUMP ← TANK

- MAX 6M (20FT),
- SUCTION HOSE Ø 1" MIN,
- MAX SUCTION HEIGHT:
  - 2M (7FT) W/O NON RETURN VALVE
  - 4M (14FT) W NON RETURN VALVE

## TECHNICAL DATA

| CODE | DESCRIPTION | FLUIDS TYPE | FLOW RATE | | VOLTAGE | | | DUTY CICLE | RPM | OUTLET |
|---|---|---|---|---|---|---|---|---|---|---|
| | | | L/MIN | GPM | DC VOLT | POWER WATT | AMP. MAX. | MINUTES | | BSP |
| F00363A0A | BIPUMP 12V WITH ON/OFF SWITCH | D | 85 | 22,4 | 12 | 500 | 42 | 30 | 2000 | 1" |
| F00363B0A | BIPUMP 24V WITH ON/OFF SWITCH | D | 85 | 22,4 | 24 | 500 | 21 | 30 | 2000 | 1" |
| F0036301A | BIPUMP 12V WITH CABLE 2M | D | 85 | 22,4 | 12 | 500 | 42 | 30 | 2000 | 1" |
| F0036302A | BIPUMP 12V WITH CABLE 4M | D | 85 | 22,4 | 12 | 500 | 42 | 30 | 2000 | 1" |
| F0036303A | BIPUMP 24V WITH CABLE 2M | D | 85 | 22,4 | 24 | 500 | 21 | 30 | 2000 | 1" |
| F0036304A | BIPUMP 24V WITH CABLE 4M | D | 85 | 22,4 | 24 | 500 | 21 | 30 | 2000 | 1" |
| F0036321A | BIPUMP 12/24 WITHOUT ON/OFF SWITCH | D | 85 | 22,4 | 12/24 | 500/500 | 42/21 | 30/30 | 2000 | 1" |

# PIUSI HAND PUMP

## FEATURES

- OPTIMIZED SUCTION CAPACITY
- STURDY CONNECTOR
- HEAVY DUTY LEVER
- FLUENT REVOLUTION
- HIGH EFFICIENCY
- ADJUSTABLE SUCTION PIPE

The PIUSI HAND PUMP is a rotary vane pump suitable for transferring low viscosity oils and diesel. Entirely designed, manufactured and certified in Italy, this sturdy pump guarantees a professional performance and easy transfer.

### PERFORMANCE

| UP TO 38L PER 100 REVOLUTIONS | 3MT LENGTH |
|---|---|
| FLOW RATE | DELYVERY HOSE |

PIUSI HAND PUMP WITH HOSE AND STAINLESS STEEL SPOUT

### PACKAGING

| CODE | WEIGHT | | PACKAGING | | | N. BOXES / EUROPALLET | |
|---|---|---|---|---|---|---|---|
| | KG | LBS | MM | INCH | PCS/BOX | ✈ | 🚢 |
| F0033250A | 2,1 | 4,6 | 350X170X140 | - | 1 | 50 | 100 |
| F0033252A | 3,2 | 7 | 300X300X180 | - | 1 | 50 | 100 |

## CHART

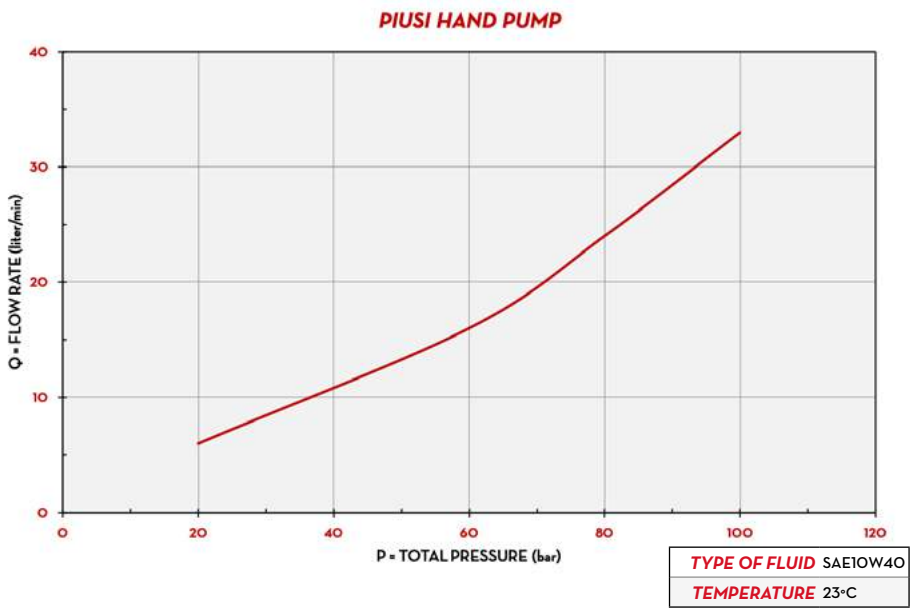


## IN THE BOX

- PIUSI HAND PUMP
- SPOUT
- SUCTION PIPE
- DRUM CONNECTOR
- INSTRUCTION MANUAL

## DETAILS

2" BSP DRUM CONNECTOR

SUCTION PIPE

NON-SLIP HANDLE

STAINLESS STEEL SPOUT

## DIMENSIONS

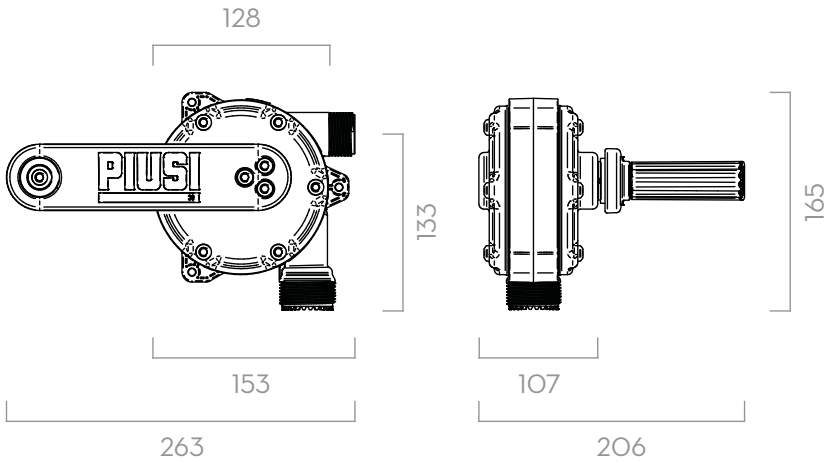


*Dimensions expressed in millimeters*

## MATERIALS

- BODY: STAINLESS STEEL, TECHONOPOLYMER
- ROTOR: TECHNOPOLYMER
- VANES: TECHNOPOLYMER

## TECHNICAL DATA

| CODE | DESCRIPTION | FLUIDS TYPE | CAPACITY PER 100 REVOLUTIONS | | DRUM CONNECTOR | SUCTION TUBE | "S" SPOUT AND HOSE TAIL | DELIVERY HOSE LENGTH |
|---|---|---|---|---|---|---|---|---|
| | | | L | USG | | | | |
| F0033250A | PIUSI HAND PUMP 2" BSP | D O | 38 | 10 | 2" BSP | YES | YES | - |
| F0033252A | KIT PIUSI HAND PUMP 2" BSP WITH HOSE | D O | 38 | 10 | 2" BSP | YES | - | 3M |

# HAND PUMPS

## FEATURES

- STURDY CONNECTOR
- SUCTION PIPE INCLUDED
- MULTI-PURPOSE PUMPS

Besides the top-quality Hand Pump, PIUSI offers a range of HAND PUMPS with different characteristics - piston or rotary - and fittings to transfer fluids from drums.

### PERFORMANCE

UP TO
**9,6 M**
LENGTH
SUCTION HOSE

PISTON HAND PUMP

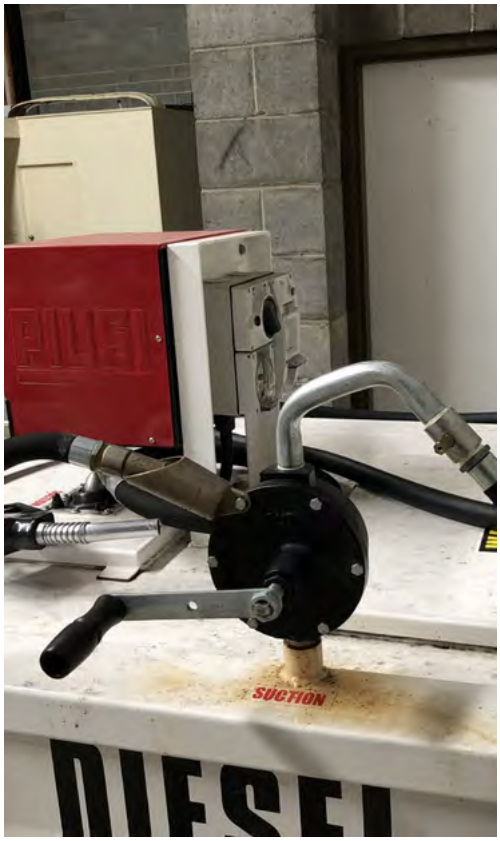


### PACKAGING

| CODE | WEIGHT | | PACKAGING | | | N. BOXES / EUROPALLET | |
|---|---|---|---|---|---|---|---|
| | KG | LBS | MM | INCH | PCS/BOX | ✈ | 🚢 |
| F0033200B | 5,6 | 12,3 | 340X160X125 | - | 1 | 120 | 144 |
| F0034900B | 3,0 | 6,6 | 600X110X65 | - | 1 | 160 | 240 |
| F0035100B | 3,0 | 6,6 | 300X150X105 | - | 1 | 160 | 200 |

ANY BIODIESEL AIR ANTIFREEZE AdBlue® BIODIESEL DIESEL FOOD GASOLINE GREASE KEROSENE OIL WATER WINDSCREEN

ALUMINIUM ROTATIVE

## IN THE BOX

- ROTARY/PISTON PUMP
- SUCTION TUBE
- CONNECTOR/ADAPTOR
- SPOUT/DELIVERY HOSE
- INSTRUCITON MANUAL

## DETAILS

NON-SLIP HANDLE

PISTON HAND PUMP

## MATERIALS

- BODY: IRON/STAINLESS STEEL/ALUMINIUM

## TECHNICAL DATA

| CODE | DESCRIPTION | FLUIDS TYPE | FLOW RATE | INLET / OUTLET | SUCTION HOSE LENGTH MM |
|---|---|---|---|---|---|
| F0033200B | H P ROTATIVA 27 L/100 REVOLUTION ALLUMINIO | O D G K | 27 L/100 REVOLUTION | M32 X 1,5 - M25 X 1,5 | 960 |
| F0034900B | PISTON HAND PUMP 25 L/100 STROKES | D O | 25 L/100 STROKES | END HOSE Ø 20 | 880 |
| F0035100B | PISTON HAND PUMP 35 L/100 STROKES | D O | 35 L/100 STROKES | END HOSE Ø 20 | 880 |

# PUMPS ACCESSORIES

## POMPE ATEX AC/DC

| EX50 | CODE | DESCRIPTION |
|---|---|---|
| | F1862600A | (EX)CABLE+CABLEGLAND ECEX EX50 12V |
| | F1815600B | (EX) ADAPTER FOR CONDUIT EX50 |
| | F1862400C | (EX) PRESSACAVO EXxd1/2NPT IECEx |

F1815600B

F1862600A

| EX100 | CODE | DESCRIPTION |
|---|---|---|
| | F21770000 | BUNG ADAPTER 2" BSP COMPLETE |
| | F22436010 | ANTISIPHONE KIT FOR EX100/EX140/E140 BSP |
| | F22053000 | MOTOR SUPPORT FEET EX80/100/140 |

F22436010

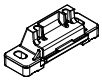
F22053000

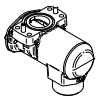
F21770000

| EX140 | CODE | DESCRIPTION |
|---|---|---|
| | F21770000 | BUNG ADAPTER 2" BSP COMPLETE |
| | F22436010 | ANTISIPHONE KIT FOR EX100/EX140/E140 BSP |
| | F22053000 | MOTOR SUPPORT FEET EX80/100/140 |

F22436010

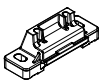
F22053000

F21770000

## HAND PUMP

| PIUSI HAND PUMP | CODE | DESCRIPTION |
|---|---|---|
| | F15236000 | ADATTATORE M\F 2IN - 56X4 ADBLUE |
| | R1512800A | ADAPTER M/F 2" - S70X6 ADBLUE |

R1512800A

F15236000

# POMPE AC/DC

| E80 / E120 | CODICE | DESCRIZIONE |
|---|---|---|
| | F1392000A | KIT ANTI-SYPHON FOR P56/72 E80/120 |

| E140 | CODICE | DESCRIZIONE | |
|---|---|---|---|
| | F22436010 | ANTISIPHONE KIT FOR EX100/EX140/E140 BSP | F22436010 |

| BP3000 | CODICE | DESCRIZIONE | |
|---|---|---|---|
| | F1701800A | KIT TERMINAL BOX+4M CABLE W\CLAMP 12-24V | R1601100B F1701800A F1729000A F1728900A |
| | F1728900A | KIT TERMINAL BOX+2M CABLE W\CLAMP 12-24V | |
| | F1729000A | KIT TERMINAL BOX+6M CABLE W\CLAMP 12-24V | |
| | R1601100B | ELECTRICAL BOX WITH SWITCH BP3000 | |

## SPECIFIC CONNECTIONS FOR BP3000

| | | | | | |
|---|---|---|---|---|---|
| | F1617300A | LP 3/4 90° HOSE TAIL KIT (1 PCS.) | | F16178000 | LP 90° FLANGED ELBOW-NEW |
| | F1726200A | HOSE TAIL 90° 1" | | F16770000 | KIT N.1 ELBOW 90° WITHOUT FLANGE |

| | | | | | |
|---|---|---|---|---|---|
| | F16172000 | LP 3/4 STRAIGHT HOSE TAIL KIT (2 PCS.)-N | | F16799000 | FLANGED ADAPTER BP3000-VANTAGE 1"G-F |
| | F17124000 | STRAIGHT HOSE TAIL 1" BP3000 | | F17313000 | FLANGED ADAPTER BP3000 \ VANTAGE 1ING - |
| | | | | F17314000 | FLANGED ADAPTER BP3000\VANTAGE 3/4ING -F |

| PANTHER DC | CODICE | DESCRIZIONE | |
|---|---|---|---|
| | F1001100A | CABLE 2X6X2 MT EYELET TERMINAL 12V | R10011000 R10040000 R10041000 R10039000 R13242000 |
| | F1004000A | CABLE 2X6X2 MT EYELET TERMINAL 24V | |
| | F1004100A | CABLE 2X6X4 MT EYELET TERMINAL 12V | |
| | F1003900A | CABLE 2X6X4 MT EYELET TERMINAL 24V | |
| | R13242000 | KIT MANIGLIA PANTHER DC | |

| BIPUMP | CODICE | DESCRIZIONE | |
|---|---|---|---|
| | F1420000B | KIT MANIGLIA BIPUMP | R14334000 R14335000 F1420000B |
| | F1433400A | CABLE 2X6X2MT BIPUMP | |
| | F1433500A | CABLE 2X6X4MT BIPUMP | |

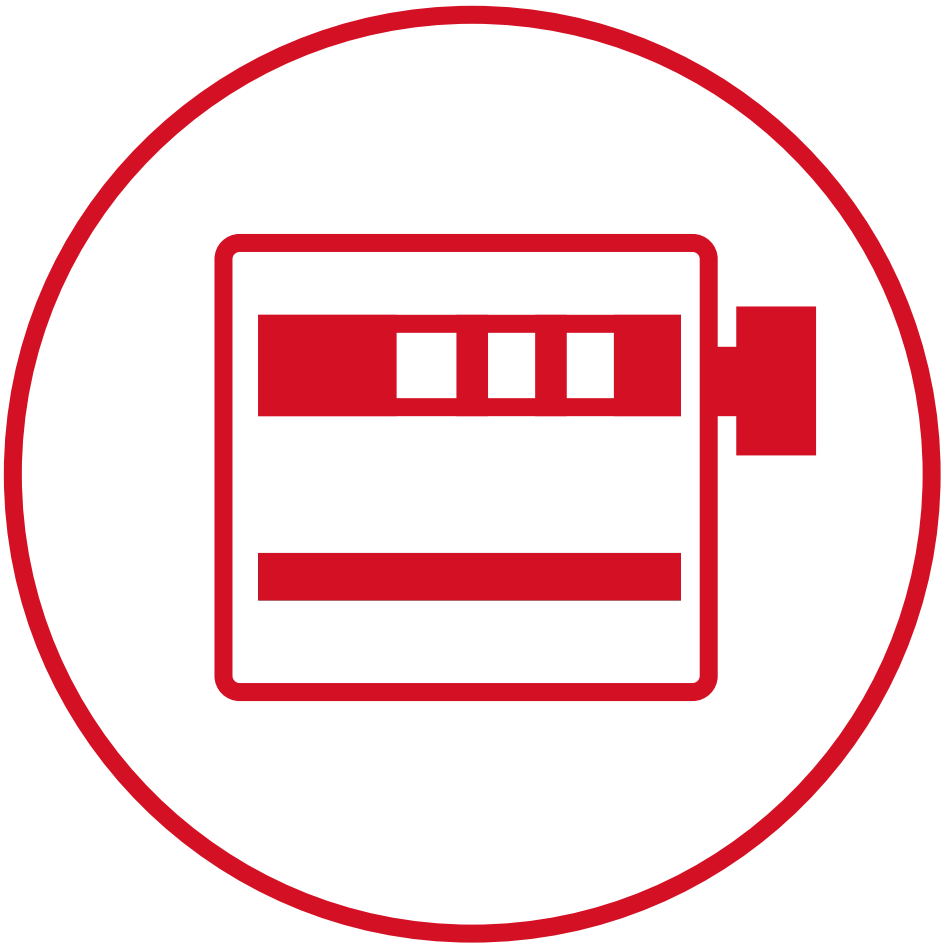

# METERS

# K24 ATEX

## FEATURES

- BURSTING PRESSURE 100 BAR
- LCD DISPLAY
- FLOW RATE INDICATION
- EASY TO CALIBRATE
- UL VERSION AVAILABLE

The PIUSI K24 ATEX, specifically designed to be compliant with ATEX/IECEx requirements, is manufactured using high-quality materials compatible with gasoline, kerosene and diesel to be used in potentially explosive areas.
This turbine flow meter is equipped with a 6-digit totalizer and partial reset.

Atex

II 2 G

CLASSIFIED c UL us

K24 ATEX / IECEX

### PERFORMANCE

| | |
|---|---|
| 7-120 L/MIN | 20 BAR MAX |
| FLOW RATE | OPERATING PRESSURE |
| ± 1% | 0,3% |
| ACCURACY | REPEATABILITY |

OUR PRODUCT COMPLIES WITH THE FOLLOWING MARKING ATEX/IECEx

| II | 2 | G | Ex | ia | IIB | T4 | Gb |
|---|---|---|---|---|---|---|---|
| GROUP | CATEGORY | TYPE OF EXPLOSIVE ATMOSPHERE | PERMANENT PREFIX | PROTECTION METHOD | GAS GLASS | TEMPERATURE CLASS | EQUIPMENT PROTECTION LEVEL |

### PACKAGING

| CODE | WEIGHT | | PACKAGING | | |
|---|---|---|---|---|---|
| | KG | LBS | MM | INCH | PCS/BOX |
| **K24 A ATEX/IECEX METER** | | | | | |
| FOO408XOO | 0,65 | 1,4 | 115X160X135 | 4,5X6,3X5,3 | 1 |
| **K24 A ATEX/IECEX PULSER** | | | | | |
| FOO408YOO | 0,65 | 1,4 | 115X160X135 | 4,5X6,3X5,3 | 1 |

ANY BIODIESEL · AIR · ANTIFREEZE · AdBlue® · BIODIESEL · DIESEL · FOOD · GASOLINE · GREASE · KEROSENE · OIL · WATER · WINDSCREEN

## CHART

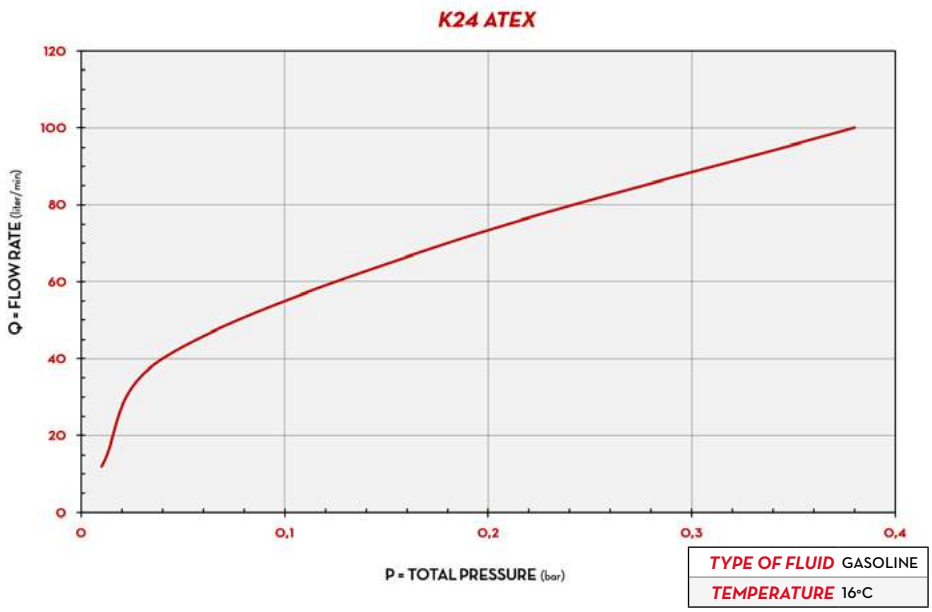


## IN THE BOX

- K24 ATEX METER
- INSTRUCTION MANUAL

## DETAILS

ROTABLE DISPLAY

BI-DIRECTIONAL

TURBINE PULSE METER

## DIMENSIONS

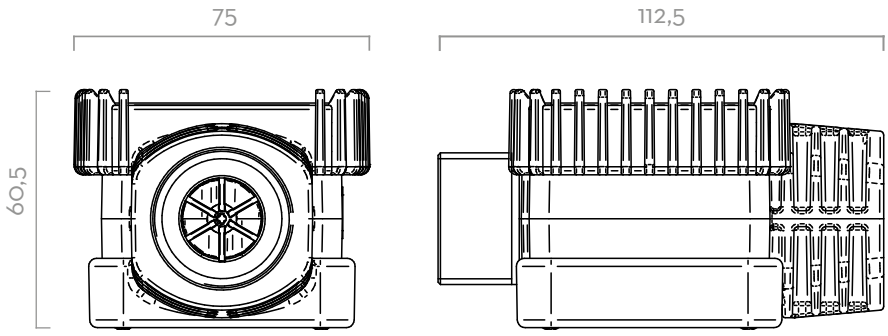


*Dimensions expressed in millimeters*

## MATERIALS

- BODY: ALUMINIUM
- GEARS: TECHNOPOLYMER

## TECHNICAL DATA

| CODE | DESCRIPTION | FLUIDS TYPE | FLOW RATE | | PRESSURE | | SPECIAL BATTERY INCLUDED N° 1 3V LITHIUM | FLANGE | INLET / OUTLET |
|---|---|---|---|---|---|---|---|---|---|
| | | | L/MIN | GPM | BAR | PSI | | | |
| ***K24 A ATEX/IECEX METER*** | | | | | | | | | |
| F00408X00 | K24 A M/F 1" BSP ATEX/IECEX | D G K | 7 - 120 | 2 - 32 | 20 | 300 | YES | NO | M 1" BSP - F 1" BSP |
| ***K24 A ATEX/IECEX PULSER*** | | | | | | | | | |
| F00408Y00 | K24 A PULSER M/F 1" BSP ATEX/IECEX (92 PULSE/L) | D G K | 7 - 120 | 2 - 32 | 20 | 300 | NO | NO | M 1" BSP - F 1" BSP |

FLUIDS PERMITTED: DIESEL, KEROSENE, PETROL, PETROL ALCOHOL MIXED MAX 20% , ASPEN 2/4. UL CLASSIFIED VERSION AVAILABLE

# K33 ATEX

## FEATURES

- BURSTING PRESSURE 28 BAR
- 3 DIGIT DISPLAY
- EASY TO CALIBRATE
- 4 FLOW DIRECTIONS

The PIUSI K33 ATEX is an oval gear mechanical meter engineered for an accurate measuring of the quantity of fluid dispensed that meets the ATEX/IECEx requirements related to the use in potentially explosive atmospheres. Reliable and easy to install, it can be calibrated on site and simply fitted with both rigid or flexible pipes or can be put directly on pumps and tanks.

### PERFORMANCE

| | |
|---|---|
| 20-120 L/MIN<br>FLOW RATE | 3,5 BAR MAX<br>OPERATING PRESSURE |
| ± 1%<br>ACCURACY | 0,3%<br>REPEATABILITY |

K33 - ATEX

OUR PRODUCTS COMPLIES WITH THE FOLLOWING MARKING ATEX

| II | 2 | G | c | IIB | T6 |
|---|---|---|---|---|---|
| GROUP | CATEGORY | TYPE OF EXPLOSIVE ATMOSPHERE | PROTECTION METHOD | GAS GLASS | TEMPERATURE CLASS |

### PACKAGING

| CODE | WEIGHT | | PACKAGING | | | N. BOXES / EUROPALLET | |
|---|---|---|---|---|---|---|---|
| | KG | LBS | MM | INCH | PCS/BOX | ✈ | 🚢 |
| F0057000A | 2,02 | 4,44 | 180X180X170 | - | 1 | 192 | 240 |
| F0057001A | 2,02 | 4,44 | 180X180X170 | - | 1 | 192 | 240 |
| F0057002A | 2,02 | 4,44 | 180X180X170 | - | 1 | 192 | 240 |
| F0057003A | 2,02 | 4,44 | 180X180X170 | - | 1 | 192 | 240 |

## CHART

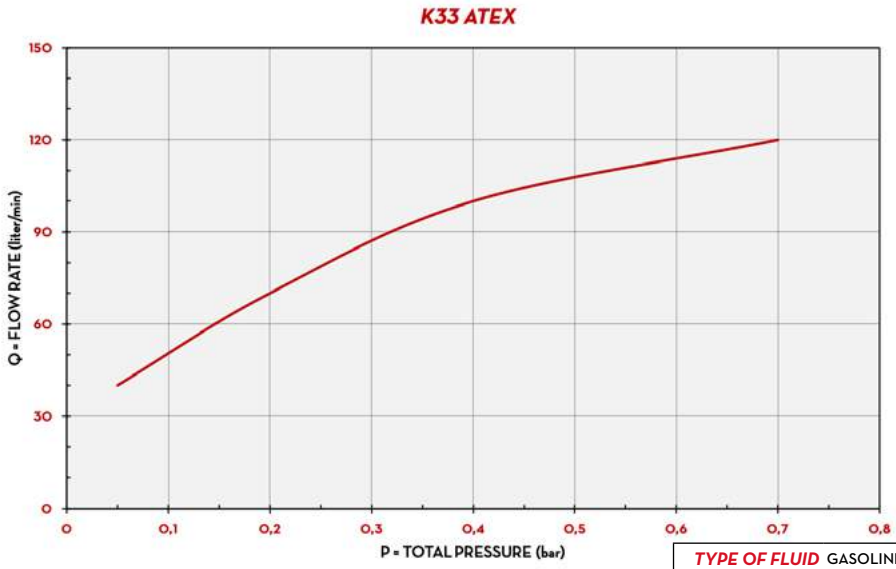


| | |
|---|---|
| TYPE OF FLUID | GASOLINE |
| TEMPERATURE | 16°C |

## IN THE BOX

- K33 ATEX METER
- INSTRUCTION MANUAL

## DETAILS

NUTATING DISK SYSTEM

4 FLOW DIRECTIONS

ATEX APPROVED

SAFETY BONDING

## DIMENSIONS

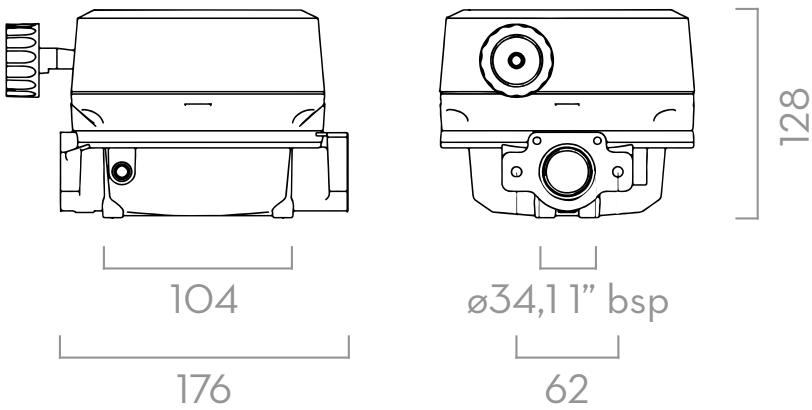


*Dimensions expressed in millimeters*

## MATERIALS

- BODY: ALUMINIUM
- NUTATING DISK CHAMBER: TECHNOPOLYMER

## TECHNICAL DATA

| CODE | DESCRIPTION | FLUIDS TYPE | FLOW DIRECTION | FLOW RATE | | PRESSURE | | INLET / OUTLET |
|---|---|---|---|---|---|---|---|---|
| | | | | L/MIN | GPM | BAR | PSI | |
| F0057000A | K33 - ATEX VER. A | D G K | ← | 20 - 120 | 5 - 32 | 3,5 | 50 | 1" BSP |
| F0057001A | K33 - ATEX VER. B | D G K | ↑ | 20 - 120 | 5 - 32 | 3,5 | 50 | 1" BSP |
| F0057002A | K33 - ATEX VER. C | D G K | ↓ | 20 - 120 | 5 - 32 | 3,5 | 50 | 1" BSP |
| F0057003A | K33 - ATEX VER. D | D G K | → | 20 - 120 | 5 - 32 | 3,5 | 50 | 1" BSP |

FLUIDS PERMITTED: DIESEL, KEROSENE, PETROL, PETROL ALCOHOL MIXED MAX 20% , ASPEN 2/4. UL CLASSIFIED VERSION AVAILABLE

# K150 ATEX

## FEATURES

- HEAVY DUTY CONDITIONS
- HIGH FLOW RATE
- BURSTING PRESSURE 28 BAR
- EASY READING
- 4 FLOW DIRECTIONS

K150 ATEX is expressly engineered to meet the market requirements of a meter suitable for flow rates superior than 120 l/min and that can be used both for fluids such as diesel and biodiesel, as well as in potentially explosives atmosphere; with gasoline for example. K150 is easy to calibrate and ready to use; its aluminium cover and sturdy body make this meter suitable for a wide arrange of application while gua-ranteeing the same precision and quality that have always featured PIUSI equip-ment. The mechanical display allows to read quickly the quantity dispensed. It can be installed everywhere thanks to the (optional) 1"BSP flange kit. K150 is certified CE, ATEX/UL and tested in PIUSI laboratories for over 4 milion litres to guarantee the maximum reliability.

### PERFORMANCE

| | |
|---|---|
| UP TO 25-150 L/MIN<br>FLOW RATE | 3,5 BAR MAX<br>OPERATING PRESSURE |
| ± 1%<br>ACCURACY | 0,3%<br>REPEATABILITY |

K150

OUR PRODUCTS COMPLIES WITH THE FOLLOWING MARKING ATEX

| II | 2 | G | c | IIB | T6 |
|---|---|---|---|---|---|
| GROUP | CATEGORY | TYPE OF EXPLOSIVE ATMOSPHERE | PROTECTION METHOD | GAS GLASS | TEMPERATURE CLASS |

### PACKAGING

| CODE | WEIGHT | | PACKAGING | | | BOXES/EUROPALLET | |
|---|---|---|---|---|---|---|---|
| | KG | LBS | MM | INCH | PCS/BOX | ✈ | 🚢 |
| F00555A00 | 2,38 | 5,25 | 185X185X170 | 7,28X7,28X6,69 | 1 | 192 | 240 |
| F00555B00 | 2,38 | 5,25 | 185X185X170 | 7,28X7,28X6,69 | 1 | 192 | 240 |
| F00555C00 | 2,38 | 5,25 | 185X185X170 | 7,28X7,28X6,69 | 1 | 192 | 240 |
| F00555D00 | 2,38 | 5,25 | 185X185X170 | 7,28X7,28X6,69 | 1 | 192 | 240 |

## CHART

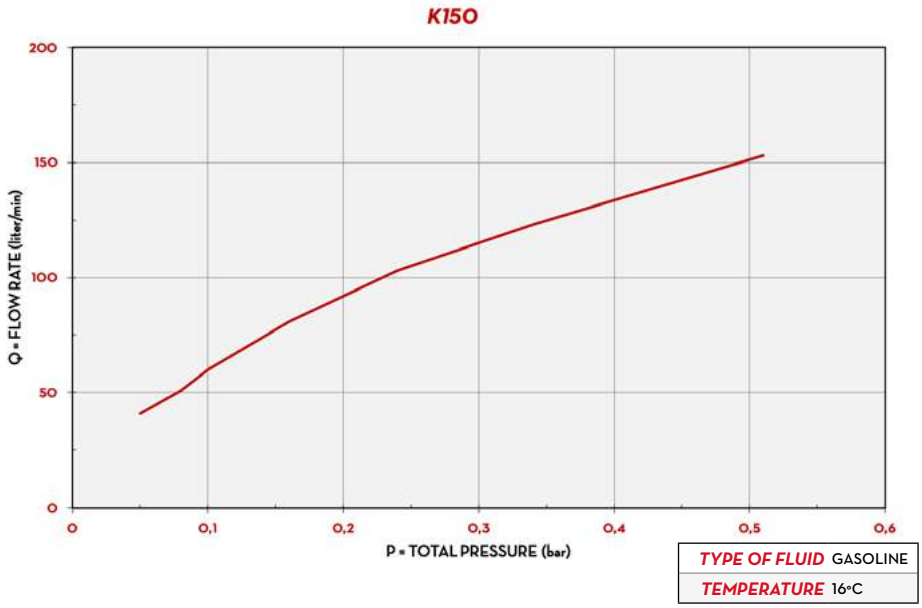


## IN THE BOX

- K150 ATEX METER
- INSTRUCTION MANUAL

## DETAILS

NUTATING DISK

4 FLOW DIRECTIONS

ATEX APPROVED

METALLIC COVER

## DIMENSIONS

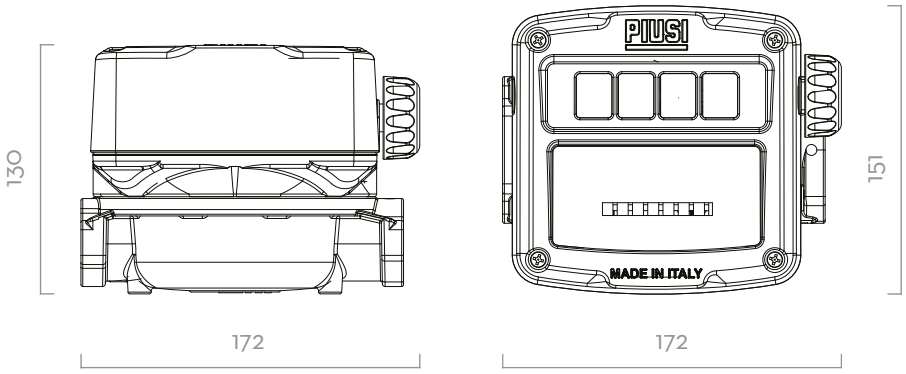


*Dimensions expressed in millimeters*

## MATERIALS

- BODY AND COVER: ALUMINIUM
- NUTATING DISK CHAMBER: TECHNOPOLYMER

## TECHNICAL DATA

| CODE | DESCRIPTION | FLUIDS TYPE | FLOW RATE | | FLOW DIRECTIONS | PRESSURE | | INLET/OUTLET |
|---|---|---|---|---|---|---|---|---|
| | | | L/MIN | GPM | | BAR | PSI | BSP |
| F00555A00 | (EX) K150 METER VER.A ATEX | D G K | 25-150 | 6,6-40 | ← | 3,5 | 50 | 1" BSP |
| F00555B00 | (EX) K150 METER VER.B ATEX | D G K | 25-150 | 6,6-40 | ↑ | 3,5 | 50 | 1" BSP |
| F00555C00 | (EX) K150 METER VER.C ATEX | D G K | 25-150 | 6,6-40 | ↓ | 3,5 | 50 | 1" BSP |
| F00555D00 | (EX) K150 METER VER.D ATEX | D G K | 25-150 | 6,6-40 | → | 3,5 | 50 | 1" BSP |

THE PIUSI K150 IS A MECHANICAL METER EXPRESSLY ENGINEERED FOR HEAVY DUTY AND HIGH FLOW RATE APPLICATIONS. IT IS EASY TO CALIBRATE AND READY-TO-USE; ITS ALUMINIUM COVER AND STURDY BODY MAKE THIS METER SUITABLE FOR A WIDE ARRANGE OF APPLICATIONS WHILE GUARANTEEING THE SAME PRECISION AND QUALITY THAT HAVE ALWAYS BEEN A FEATURE OF PIUSI EQUIPMENT.

# K24

## FEATURES

- BURSTING PRESSURE 100 BAR
- LCD DISPLAY
- FLOW RATE INDICATION
- EASY TO CALIBRATE

The PIUSI K24 is a turbine digital flow meter specifically designed for diesel. Easy to install in-line or at the end of a delivery pipe, it is equipped with a rotatable display. This meter is available both with aluminium or technopolymer body.

BIO diesel · PIUSI · ANY BIODIESEL
STANDARD VERSION (F00408100)
COMPATIBLE WITH ANY BIODIESEL

K24

### PERFORMANCE

| | |
|---|---|
| 7-120 L/MIN | 20 BAR MAX |
| FLOW RATE | OPERATING PRESSURE |
| ± 1% | 0,2% |
| ACCURACY | REPEATABILITY |

K24 plastic version

K24 PULSER

### PACKAGING

| CODE | WEIGHT | | PACKAGING | | |
|---|---|---|---|---|---|
| | KG | LBS | MM | INCH | PCS/BOX |
| **K24** | | | | | |
| F0040700A | 0,5 | 1,1 | BLISTER | BLISTER | 1 |
| F00408100 | 0,5 | 1,1 | BLISTER | BLISTER | 1 |
| **K24 PULSER** | | | | | |
| F0040722A | 0,5 | 1,1 | 115X160X135 | 4,5X6,3X5,3 | 1 |

## CHART

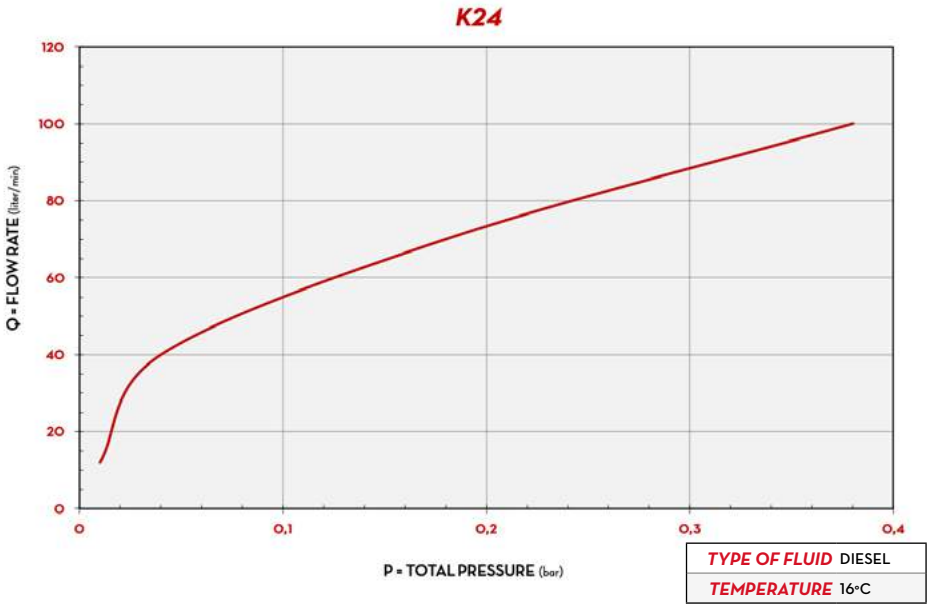


## IN THE BOX

- K24 METER
- INSTRUCTION MANUAL

## DETAILS

ROTABLE DISPLAY

BI-DIRECTIONAL

TURBINE PULSE METER

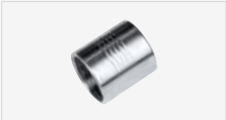
SOCKET F/F

## DIMENSIONS

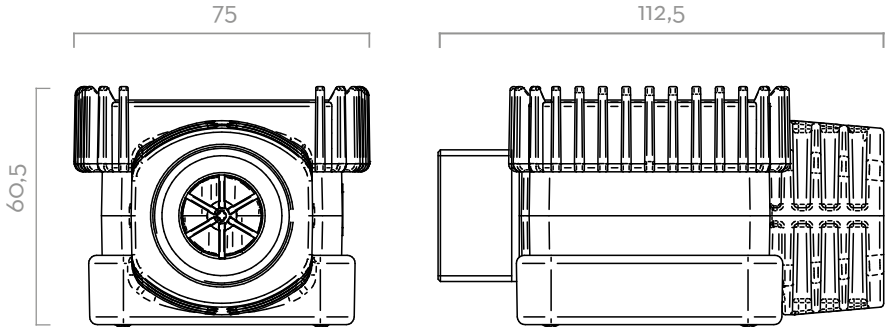


*Dimensions expressed in millimeters*

## MATERIALS

- BODY: ALUMINIUM
- GEARS: TECHNOPOLYMER

## TECHNICAL DATA

| CODE | DESCRIPTION | FLUIDS TYPE | FLOW RATE | | PRESSURE | | BATTERY | FLANGE | INLET / OUTLET |
|---|---|---|---|---|---|---|---|---|---|
| | | | L/MIN | GPM | BAR | PSI | 2X AAA BATTERY 1,5V (INCLUDED) | | |
| **K24** | | | | | | | | | |
| F0040700A | K24 METER M/MF LITER BLACK 1INBSP | D | 7 - 120 | 2 - 32 | 10 | 150 | YES | NO | M 1" BSP - M 1" BSP |
| F00408100 | K24 M/F 1" BSP | D | 7 - 120 | 2 - 32 | 20 | 300 | YES | NO | M 1" BSP - F 1" BSP |
| **K24 PULSER** | | | | | | | | | |
| F0040722A | K24 PULSER M/MF LITER BLACK 1INBSP | D | 7 - 120 | 2 - 32 | 10 | 150 | NO | NO | M 1" BSP - M 1" BSP |

UPON REQUEST AVAILABLE IN NPTF VERSION AND DISPLAY IN GALLON/QUARTER OR PRINT
N° 2X1,5V BATTERY INCLUDED

# K600/3

## FEATURES

- ADJUSTABLE FLANGES
- SUITABLE FOR INDUSTRIAL APPLICATIONS
- IDEAL FOR MOBILE INSTALLATIONS
- LOW ENERGY CONSUMPTIONS

The PIUSI K600/3 is an oval gear meter suitable for monitoring the delivery of diesel, oil and antifreeze. The meter is equipped with an integrated filter and is also available in pulser version.

### PERFORMANCE

| | |
|---|---|
| UP TO 10-100 L/MIN | 30 BAR MAX |
| FLOW RATE | OPERATING PRESSURE |
| ± 0,5% | 0,2% |
| ACCURACY | REPEATABILITY |

K600/3 PULSER

K600/3 METER

### PACKAGING

| CODE | WEIGHT | | PACKAGING | | |
|---|---|---|---|---|---|
| | KG | LBS | MM | INCH | PCS/BOX |
| **METER** | | | | | |
| F00496A00 | 1,6 | 3,5 | 200X120X140 | 7,9X4,7X5,5 | 1 |
| **PULSER** | | | | | |
| F00472A00 | 2,6 | 5,7 | 200X120X140 | 7,9X4,7X5,5 | 1 |

## CHART

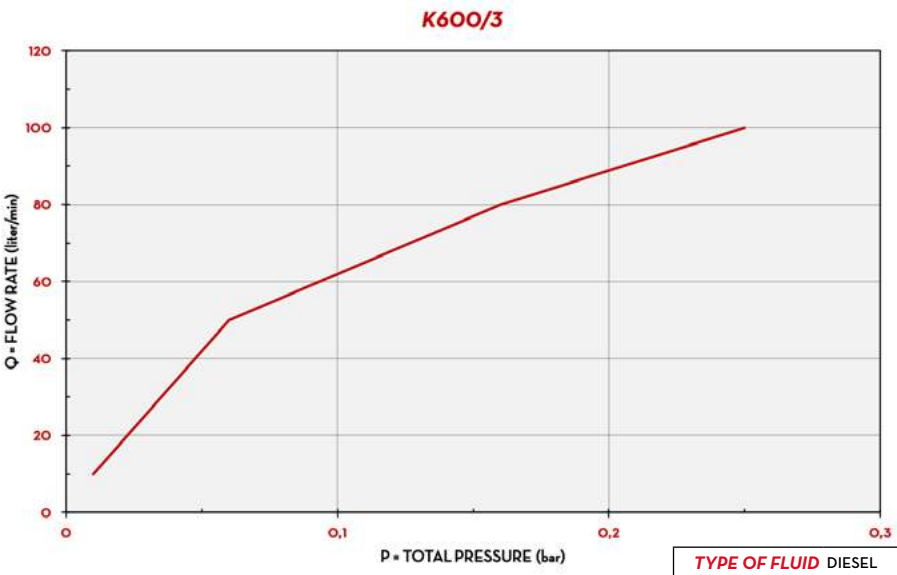


| | |
|---|---|
| TYPE OF FLUID | DIESEL |
| TEMPERATURE | 16°C |

## IN THE BOX

- K600/3 METER
- FLANGES
- INSTRUCTION MANUAL

## DETAILS

5-DIGIT DISPLAY

OVAL GEARS

## DIMENSIONS

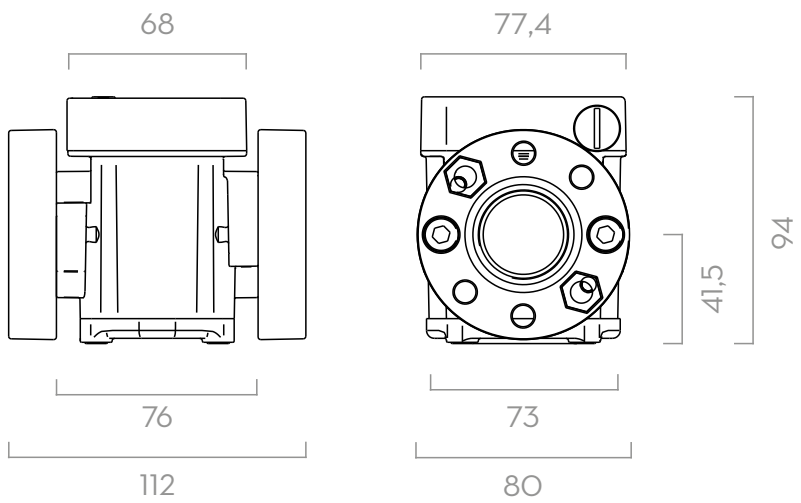


*Dimensions expressed in millimeters*

## MATERIALS

- BODY: ALUMINIUM
- GEARS: TECHNOPOLYMER

## TECHNICAL DATA

| CODE | DESCRIPTION | FLUIDS TYPE | FLOW RATE | | PRESSURE | | BATTERY | FLANGE | INLET / OUTLET | INLET FILTER |
|---|---|---|---|---|---|---|---|---|---|---|
| | | | L/MIN | GPM | BAR | PSI | N°2 X 1,5V (INCLUDED) | | | |
| **METER** | | | | | | | | | | |
| F00496A00 | K600/3 METER 1" BSP DIESEL | A D O | 10 - 100 | 2,64 - 26,4 | 30 | 426 | YES | YES | 1" BSP | YES |
| **PULSER** | | | | | | | | | | |
| F00472A00 | K600/3 PULSER 1IN BSP DIESEL | A D O | 10 - 100 | 2,64 - 26,4 | 30 | 426 | NO | YES | 1" BSP | YES |

UPON REQUEST AVAILABLE IN NPTF VERSION AND DISPLAY IN GALLON/QUARTER OR PRINT

# K600 B/3

## FEATURES

- BETTER VISIBILITY
- ADJUSTABLE FLANGES
- ROTATING DISPLAY
- STANDARD BATTERY
- PULSE-OUT VERSION AVAILABLE
- IP66

The PIUSI K600 B/3 is an oval gear meter suitable for monitoring the delivery of diesel, biodiesel and antifreeze. This special version includes a large 80mm built-in digital display that can be rotated to suit every application. Among its features: 5-digit partial total and resettable total. Pulser version available.

### PERFORMANCE

| | |
|---|---|
| UP TO 10-100 L/MIN<br>FLOW RATE | 30 BAR MAX<br>OPERATING PRESSURE |
| ± 0,5%<br>ACCURACY | 0,2%<br>REPEATABILITY |

K600 B/3 METER

K600 B/3 B100

### PACKAGING

| CODE | WEIGHT | | PACKAGING | | |
|---|---|---|---|---|---|
| | KG | LBS | MM | INCH | PCS/BOX |
| F00491000 | 2 | 4,4 | 200X120X140 | 7,9X4,7X5,5 | 1 |
| F00491000 | 2 | 4,4 | 200X120X140 | 7,9X4,7X5,5 | 1 |
| F00492000 | 2 | 4,4 | 200X120X140 | 7,9X4,7X5,5 | 1 |

ANY BIODIESEL | AIR | ANTIFREEZE | AdBlue® | BIODIESEL | DIESEL | FOOD | GASOLINE | GREASE | KEROSENE | OIL | WATER | WINDSCREEN

## CHART

| | |
|---|---|
| TYPE OF FLUID | DIESEL |
| TEMPERATURE | 16°C |

## IN THE BOX

- K600 B/3 METER
- FLANGES
- INSTRUCTION MANUAL

## DETAILS

5-DIGIT DISPLAY

OVAL GEARS

BIG AND ROTATING DISPLAY

## DIMENSIONS

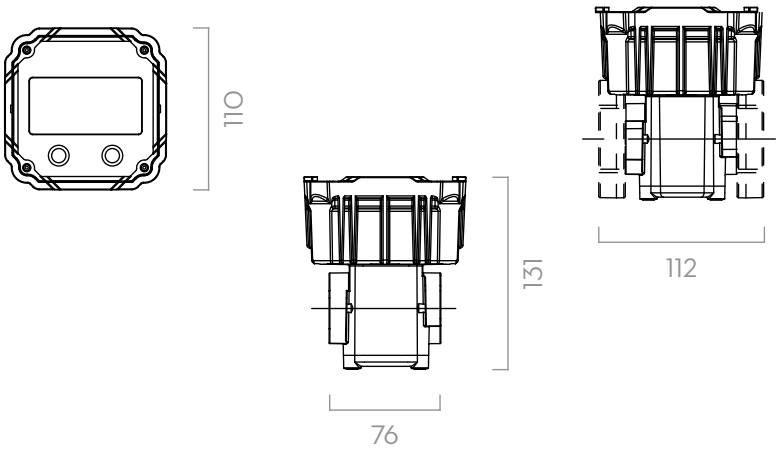


*Dimensions expressed in millimeters*

## MATERIALS

- BODY: ALUMINIUM
- GEARS: TECHNOPOLYMER

## TECHNICAL DATA

| CODE | DESCRIPTION | FLUIDS TYPE | FLOW RATE | | PRESSURE | | BATTERY | FLANGE | INLET / OUTLET | INLET FILTER |
|---|---|---|---|---|---|---|---|---|---|---|
| | | | L/MIN | GPM | BAR | PSI | N°2 X 1,5V (INCLUDED) | | | |
| F00491000 | K600 B/3 METER 1" BSP | D | 10 - 100 | 2,64 - 26,4 | 30 | 426 | YES | YES | 1" BSP | YES |
| F00492000 | K600 B / 3 1" BSP PULS OUT | D | 10 - 100 | 2,64 - 26,4 | 30 | 426 | YES | YES | 1" BSP | YES |
| F00492B00 | K600 B/3 1" BSP PULS OUT B100 | D BIO | 10 - 100 | 2,64 - 26,4 | 30 | 426 | YES | YES | 1" BSP | YES |

UPON REQUEST AVAILABLE IN NPTF VERSION AND DISPLAY IN GALLON/QUARTER OR PRINT

# K600/4

## FEATURES

- EASY TO INSTALL AND TO CALIBRATE
- VERSATILE
- HIGH PRECISION

The PIUSI K600/4 is an oval gear meter suitable for monitoring the delivery of fuels. This special version is particularly suitable for all applications in the industrial sector.

### PERFORMANCE

| | |
|---|---|
| **15-150** L/MIN<br>FLOW RATE | **20 BAR** MAX<br>OPERATING PRESSURE |
| **± 0,5%**<br>ACCURACY | **0,2%**<br>REPEATABILITY |

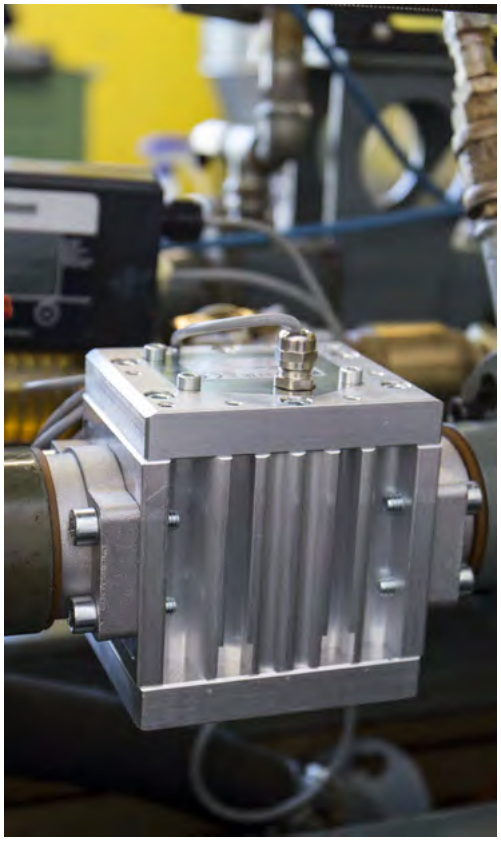

K600/4

K600/4 PULSER

### PACKAGING

| CODE | WEIGHT | | PACKAGING | | |
|---|---|---|---|---|---|
| | KG | LBS | MM | INCH | PCS/BOX |
| **METER** | | | | | |
| 00049700A | 3,2 | 7 | 200X120X140 | 7,9X4,7X5,5 | 1 |
| **PULSER** | | | | | |
| 000473000 | 3,2 | 7 | 200X120X140 | 7,9X4,7X5,5 | 1 |

ANY BIODIESEL · AIR · ANTIFREEZE · AdBlue® · BIODIESEL · DIESEL · FOOD · GASOLINE · GREASE · KEROSENE · OIL · WATER · WINDSCREEN

## CHART

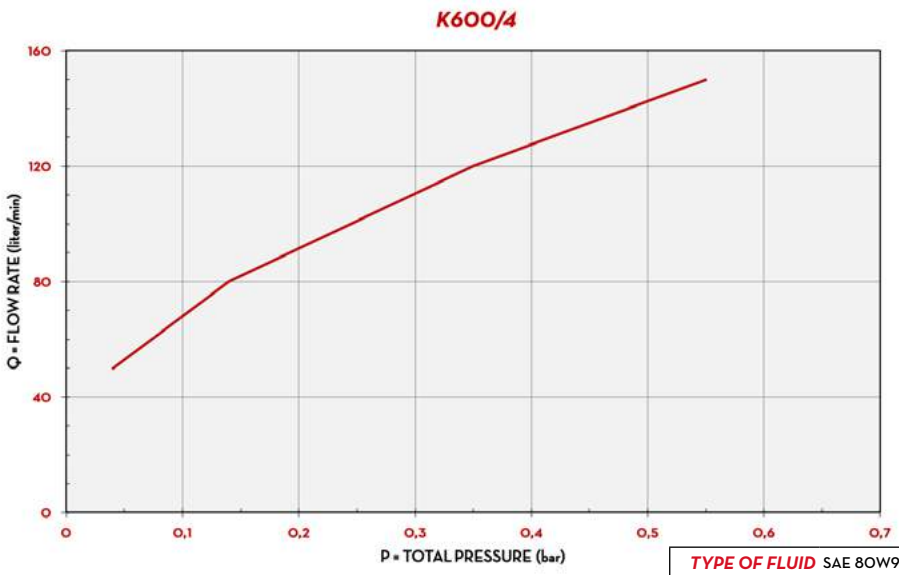


| | |
|---|---|
| TYPE OF FLUID | SAE 80W90 |
| TEMPERATURE | 20°C |

## IN THE BOX

- K600/4 METER
- FLANGES
- INSTRUCTION MANUAL

## DETAILS

5-DIGIT DISPLAY

OVAL GEARS

## DIMENSIONS

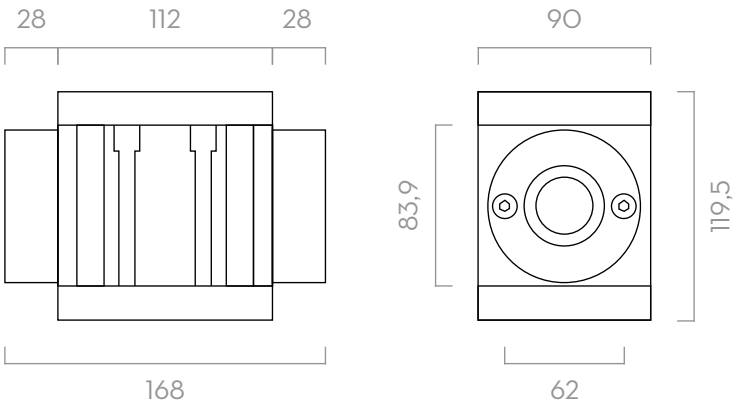


*Dimensions expressed in millimeters*

## MATERIALS

- BODY: ALUMINIUM
- GEARS: TECHNOPOLYMER

## TECHNICAL DATA

| CODE | DESCRIPTION | FLUIDS TYPE | FLOW RATE | | PULSER | | PRESSURE | | BATTERY | FLANGE | INLET / OUTLET | INLET FILTER |
|---|---|---|---|---|---|---|---|---|---|---|---|---|
| | | | L/MIN | GPM | P/L | GPM | BAR | PSI | N°2 X 1,5V (INCLUDED) | | | |
| **METER** | | | | | | | | | | | | |
| 00049700A | K600/4 | A B D O | 15 - 150 | 3,9 - 39 | - | - | 20 | 284 | YES | YES | 1 1/2" BSP | YES |
| **PULSER** | | | | | | | | | | | | |
| 000473000 | K600/4 PULSER | A B D O | 15 - 150 | 3,9 - 39 | 26 | 98 | 20 | 300 | NO | YES | 1 1/2" | YES |

UPON REQUEST AVAILABLE IN NPT VERSION.

# K700 PULSER

## FEATURES

- EASY TO INSTALL AND TO CALIBRATE
- VERSATILE
- HIGH FLOW RATE
- HEAVY DUTY
- INDUSTRIAL APPLICATIONS

The PIUSI K700 PULSER is an oval gear electronic meter with acetal resin gears. This pulse meter easily interfaces with management systems, making it the ideal solution to fit fuel distributors. It is also suitable for tanks and cisterns, loading arms controlling the consumption of fuel in burners or generator sets, besides other applications.

K700 PULSER

### PERFORMANCE

| | |
|---|---|
| 25-250 L/MIN | 20 BAR MAX |
| FLOW RATE | OPERATING PRESSURE |
| ± 0,5% | 0,2% |
| ACCURACY | REPEATABILITY |

### PACKAGING

| CODE | WEIGHT | | PACKAGING | | |
|---|---|---|---|---|---|
| | KG | LBS | MM | INCH | PCS/BOX |
| PULSER | | | | | |
| F0049800A | 5,5 | 12 | 280X160X140 | 11X6,3X5,5 | 1 |

## CHART

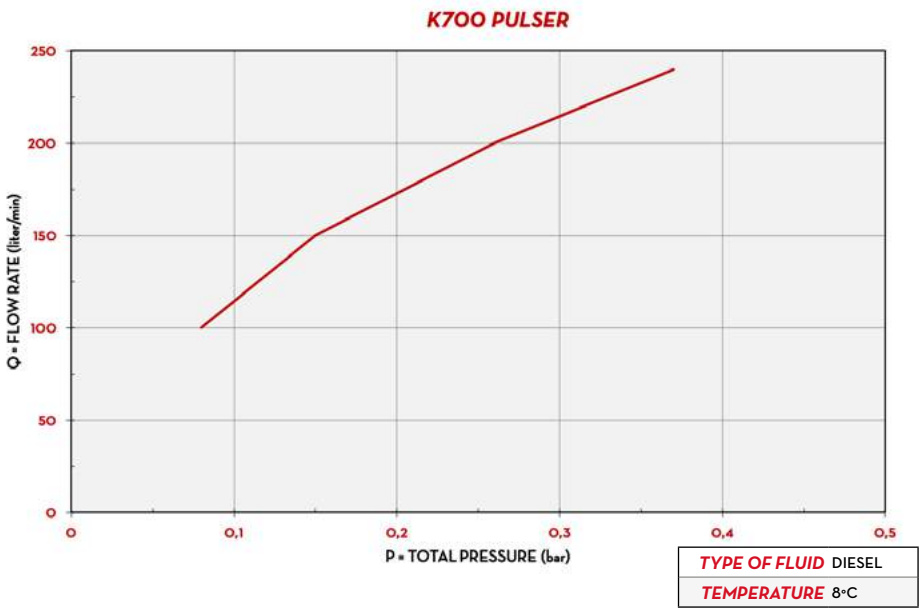


## IN THE BOX

- K700 PULSER METER
- INSTRUCTION MANUAL

## DETAILS

INBUILT SUCTION FILTER

OVAL GEARS

## DIMENSIONS

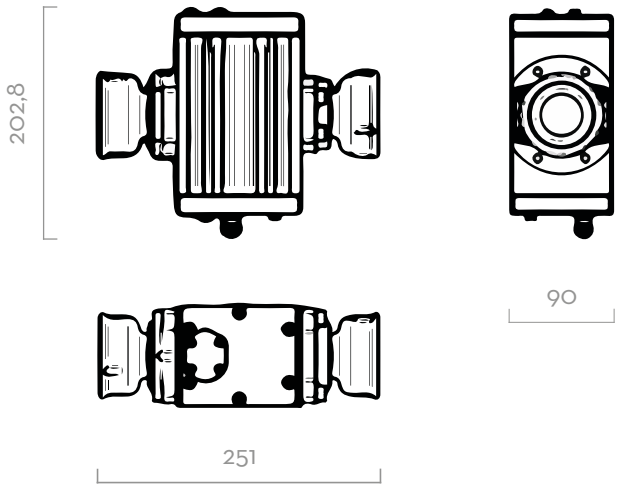


*Dimensions expressed in millimeters*

## MATERIALS

- BODY: ALUMINIUM
- GEARS: TECHNOPOLYMER

## TECHNICAL DATA

| CODE | DESCRIPTION | FLUIDS TYPE | FLOW RATE | | PULSER | | PRESSURE | | BATTERY | FLANGE | INLET / OUTLET | INLET FILTER |
|---|---|---|---|---|---|---|---|---|---|---|---|---|
| | | | L/MIN | GPM | P/L | GPM | BAR | PSI | N°2 X 1,5V (INCLUDED) | | | |
| **PULSER** | | | | | | | | | | | | |
| F0049800A | K700 PULSER | A B D O | 25 - 250 | 6,6 - 66 | 14 | 53 | 20 | 300 | NO | YES | 2" BSP | YES |

UPON REQUEST AVAILABLE IN NPT VERSION.

# K900

## FEATURES

- STURDY STRUCTURE
- HEAVY DUTY CONDITIONS
- HIGH FLOW RATE APPLICATIONS
- READY TO INSTALL

Among the electronic flow meters Made in Italy by PIUSI, the K900 is the oval gear measuring equipment suitable for controlling the non commercial dispensing of low, medium and high viscosity fluids compatible with its construction materials. This meter is equipped with an in-built suction filter, 3" inlet/outlet and free contact signal pulser.

### PERFORMANCE

| | |
|---|---|
| 50-500 L/MIN | 20 BAR MAX |
| FLOW RATE | OPERATING PRESSURE |
| ±0,5% | 0,2% |
| ACCURACY | REPEATABILITY |

K900

### PACKAGING

| CODE | WEIGHT | | PACKAGING | | |
|---|---|---|---|---|---|
| | KG | LBS | MM | INCH | PCS/BOX |
| **METER** | | | | | |
| F0049900B | 12 | 26,5 | 400X290X200 | 15,7X11,4X7,9 | 1 |
| **PULSER** | | | | | |
| F0049902B | 12 | 26,5 | 400X290X200 | 15,7X11,4X7,9 | 1 |

ANY BIODIESEL · AIR · ANTIFREEZE · AdBlue® · BIODIESEL · DIESEL · FOOD · GASOLINE · GREASE · KEROSENE · OIL · WATER · WINDSCREEN

## CHART

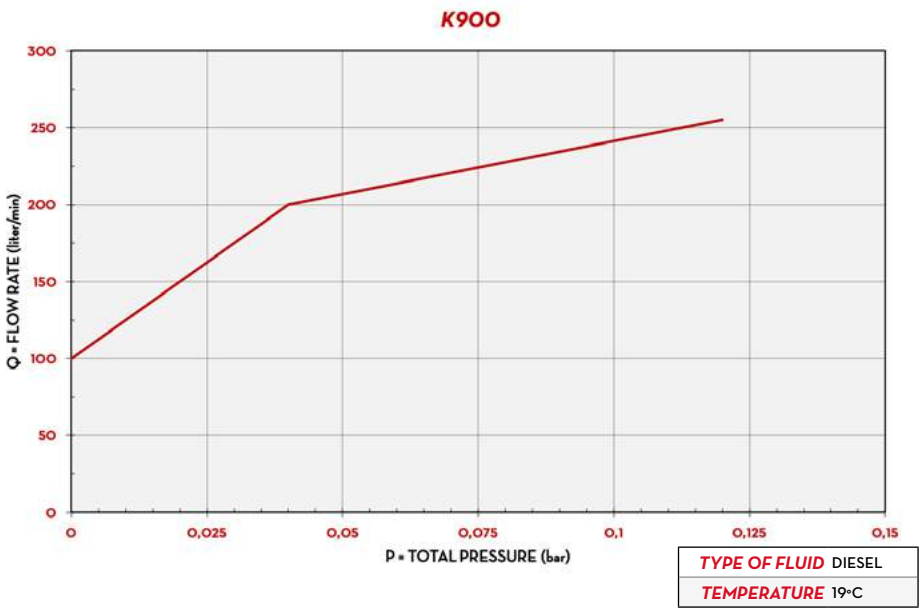


| | |
|---|---|
| TYPE OF FLUID | DIESEL |
| TEMPERATURE | 19°C |

## IN THE BOX

- K900 METER
- INSTRUCTION MANUAL

## DETAILS

INBUILT FILTER

OVAL GEARS

5 DIGIT PARTIAL TOTAL

IN/OUT 3"

## MATERIALS

- BODY: ALUMINIUM
- GEARS: TECHNOPOLYMER

## DIMENSIONS

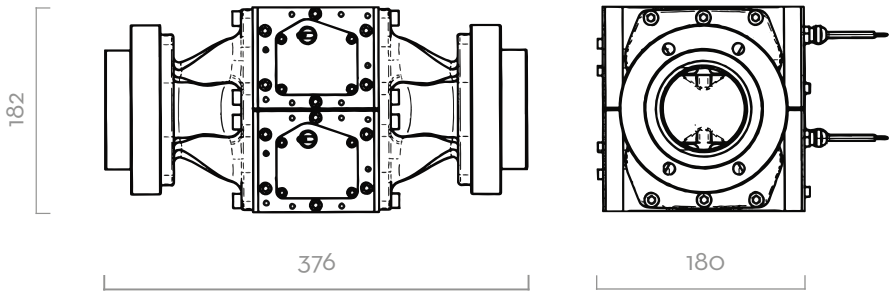


*Dimensions expressed in millimeters*

## TECHNICAL DATA

| CODE | DESCRIPTION | FLUIDS TYPE | FLOW RATE | | PULSER | | PRESSURE | | BATTERY | FLANGE | INLET / OUTLET | INLET FILTER |
|---|---|---|---|---|---|---|---|---|---|---|---|---|
| | | | L/MIN | GPM | P/L | GPM | BAR | PSI | N°2 X 1,5V (INCLUDED) | | | |
| **METER** | | | | | | | | | | | | |
| F0049900B | K900 | B D | 50 - 500 | 13,2 - 132 | - | - | 20 | 284 | YES | YES | 3" BSP | YES |
| **PULSER** | | | | | | | | | | | | |
| F0049902B | K900 PULSER | B D | 50 - 500 | 13,2 - 132 | 10 | 38 | 20 | 284 | YES | YES | 3" BSP | YES |

UPON REQUEST AVAILABLE IN NPT VERSION. DISPLAY POWER SUPPLY 4-12VDC, 1.2 AMP. TYPE OF OUTPUT SIGNAL: OPEN COLLECTOR MAX 50V, 1.2 AMP, SINGLE CHANNEL.

# REMOTE DISPLAY

## FEATURES

- *LARGE SCREEN DISPLAY*
- *NON RESETTABLE TOTAL*
- *STANDARD BATTERY*

REMOTE DISPLAY for remote control (via max. 15 m. cable) of pulse meters. The large screen displays the quantity delivered and the non resettable total Equipped with software applications for calibrating meters. Available as both basic display device and as pulse emitter. Indispensable for receivers designed to recognise only discreet quantities of impulses. The easy interfacing management systems of the pulse transmitter models extend the field of application of pulse meters combined with remote displays.

### PERFORMANCE

| every | UP TO |
|---|---|
| PULSE METER | 100 PULSES/LITER |
| COMPATIBILITY | |

REMOTE DISPLAY

### PACKAGING

| CODE | WEIGHT | | PACKAGING | | |
|---|---|---|---|---|---|
| | KG | LBS | MM | INCH | PCS/BOX |
| F117520OB | 1,2 | 2,6 | 200X120X140 | 7,9X4,7X5,5 | 1 |
| F117530OB | 1,2 | 2,6 | 200X120X140 | 8,9X4,9X5,9 | 1 |
| F117540OB | 1,2 | 2,6 | 200X120X140 | 8,9X4,9X5,9 | 1 |
| F0049501A | 1,2 | 2,6 | 200X120X140 | 8,9X4,9X5,9 | 1 |
| F0049502A | 1,2 | 2,6 | 200X120X140 | 8,9X4,9X5,9 | 1 |

ANY BIODIESEL · AIR · ANTIFREEZE · AdBlue® · BIODIESEL · DIESEL · FOOD · GASOLINE · GREASE · KEROSENE · OIL · WATER · WINDSCREEN

## CHART

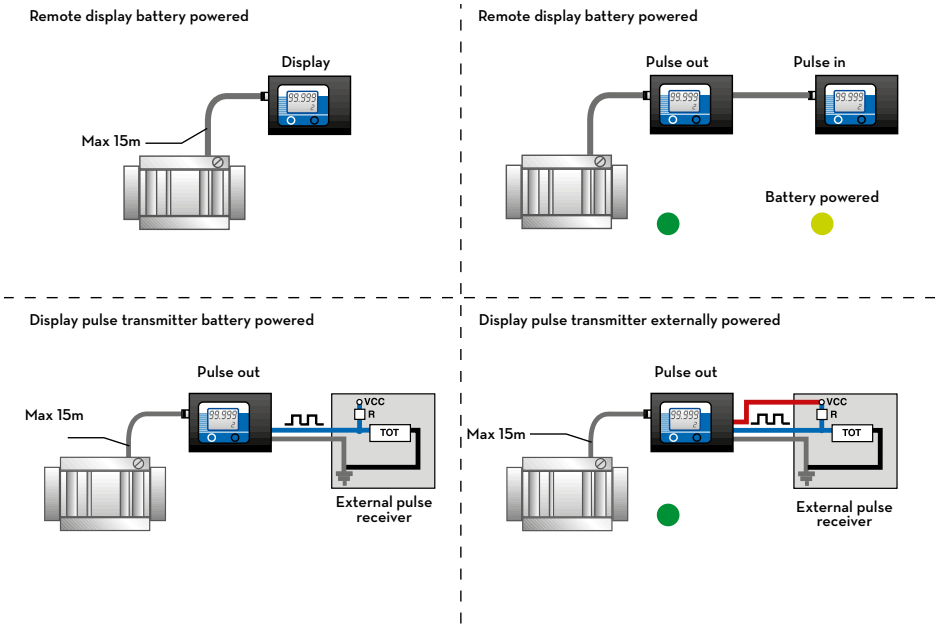


## IN THE BOX

- REMOTE DISPLAY UNIT
- BRACKET ADJUSTABLE
- INSTRUCTION MANUAL

## DETAILS

5 DIGITS PARTIAL TOTAL

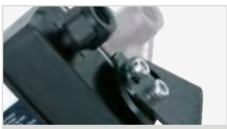

ADJUSTABLE BRACKET

## DIMENSIONS

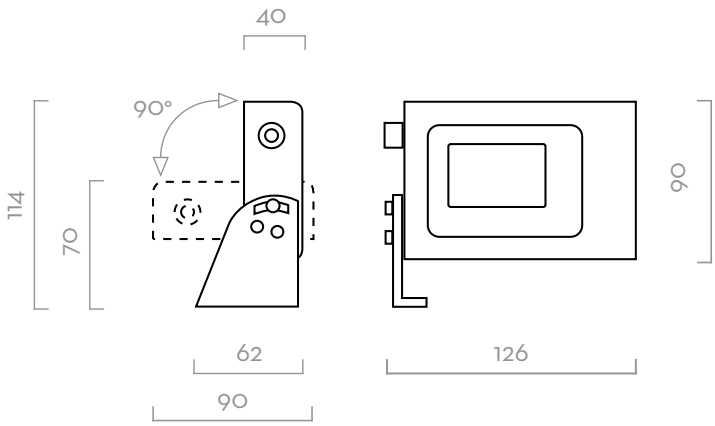


*Dimensions expressed in millimeters*

## TECHNICAL DATA

| CODE | DESCRIPTION | FLUIDS TYPE | METERS | INLET OUTLET |
|---|---|---|---|---|
| F1175200B | REMOTE DISPLAY PULSE OUT K600 | Ad B D O W W | K600 DIESEL | PULSE OUT |
| F1175300B | REMOTE DISPLAY PULSE OUT K600/4 | Ad B D O W W | K600/4 | PULSE OUT |
| F1175400B | REMOTE DISPLAY PULSE OUT K700 | Ad B D O W W | K700 | PULSE OUT |
| F0049501A | REMOTE DISPLAY PULSE OUT UNIVERSAL | Ad B D O W W | K200, K400, K600 OIL, K600 DIESEL, K600/4, K700 | PULSE OUT |
| F0049502A | UNIVERSAL REMOTE DISPLAY PULSE IN | Ad B D O W W | FOR ALL PIUSI PULSE OUT REMOTE DISPLAY | PULSE IN |

# K90

## FEATURES

- EASY TO CALIBRATE
- RELIABILITY AND ACCURACY: TESTED FOR MORE THAN 4 MILLION LITERS DISPENSED
- HIGH VISIBILITY 3-DIGIT NUMERIC DISPLAY AND 7-DIGIT TOTALIZER
- 90° IN-OUT FLOW: ALLOWS THE USER TO AVOID THE USE OF ADDITIONAL FITTINGS IN THE DISPENSING SYSTEM
- NO BATTERY NEEDED

The new PIUSI K90 flow meters enters the high-precision range: the accurate mechanical meter is ideal for environments requiring a compact, simple and easy to install product. It is suitable for a wide range of industries, from construction to logistics, agriculture or mining. The PIUSI K90 can be installed on fuel transfer systems with flow rates from 20 to 90 l/min, and thanks to its accuracy of ±0.6% in the 50-70 l/min dispensing range, it is positioned as one of the most accurate solutions in the mechanical flow meter segment.

### PERFORMANCE

| | |
|---|---|
| 20-90 L/MIN<br>FLOW RATE | 3,5 BAR<br>WORKING PRESSURE MAX. |
| ±0,6%<br>(RANGE 50-70 L/MIN)<br>ACCURACY | ±0,3%<br>REPEATIBILITY |

**K90**
(No threaded flanges.)

FLUID DIRECTION

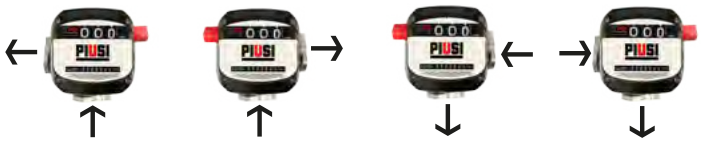

| CODE | F009SW000 | F009SE000 | F009ES000 | F009WS000 |
|---|---|---|---|---|
| SUCTION | Below | Below | Right | Left |
| DELIVERY | Left | Right | Below | Below |

### PACKAGING

| CODE | WEIGHT | | PACKAGING | | | N. BOX / EUROPALLET | |
|---|---|---|---|---|---|---|---|
| | KG | LBS | MM | INCH | PCS/BOX | ✈ | 🚢 |
| F009ES000 | 2,068 | 4,55 | 180X180X170 | 7,28X7,28X6,69 | 1 | 192 | 240 |
| F009SE000 | 2,068 | 4,55 | 180X180X170 | 7,28X7,28X6,69 | 1 | 192 | 240 |
| F009SW000 | 2,068 | 4,55 | 180X180X170 | 7,28X7,28X6,69 | 1 | 192 | 240 |
| F009WS000 | 2,068 | 4,55 | 180X180X170 | 7,28X7,28X6,69 | 1 | 192 | 240 |

## CHART

### K90

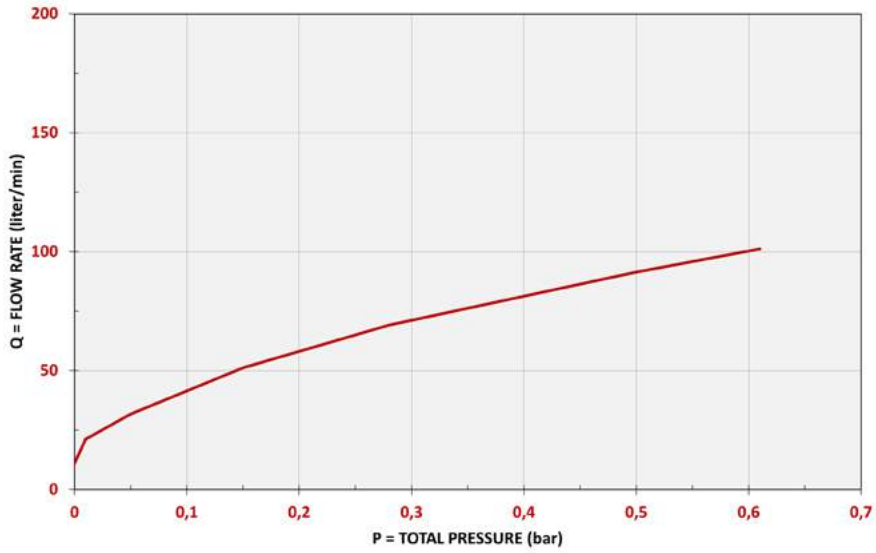


| | |
|---|---|
| TYPE OF FLUID | DIESEL |
| TEMPERATURE | 14,8°C |

## IN THE BOX

- K90 METER
- INSTRUCTION MANUAL

## DETAILS

INLET & OUTLET FLOW DIRECTION

UNTHREADED INLET/OUTLET

NUTATING DISK SYSTEM

## MATERIALS

- BODY: ALUMINIUM
- NUTATING DISK CHAMBER: TECHNOPOLYMER

## DIMENSIONS

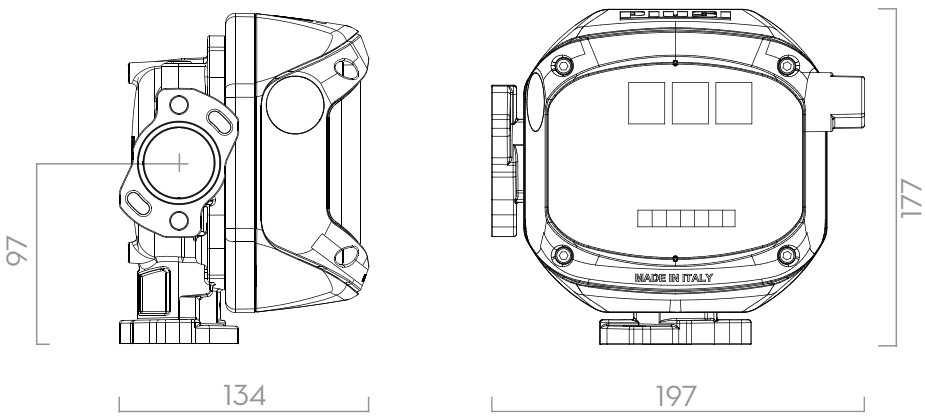


*Dimensions expressed in millimeters*

## TECHNICAL DATA

| CODE | DESCRIPTION | FLUIDS TYPE | FLOW RATE | | PRESSURE | | ACCURACY | | INLET/OUTLET |
|---|---|---|---|---|---|---|---|---|---|
| | | | L/MIN | GPM | BAR | PSI | 20-90 L/MIN | 50-70 L/MIN | |
| F009ES000 | CONTALITRI K90 - VER. ES | D | 20-90 l/min | 5-24 GPM | 3,5 | 50 | ± 0,8% | ± 0,6% | Ø 29,5 |
| F009SE000 | CONTALITRI K90 - VER. SE | D | 20-90 l/min | 5-24 GPM | 3,5 | 50 | ± 0,8% | ± 0,6% | Ø 29,5 |
| F009SW000 | CONTALITRI K90 - VER. SW | D | 20-90 l/min | 5-24 GPM | 3,5 | 50 | ± 0,8% | ± 0,6% | Ø 29,5 |
| F009WS000 | CONTALITRI K90 - VER. WS | D | 20-90 l/min | 5-24 GPM | 3,5 | 50 | ± 0,8% | ± 0,6% | Ø 29,5 |

# K33 / K44

## FEATURES

- READY TO USE
- BURSTING PRESSURE 28 BAR
- NO BATTERY NEEDED
- EASY TO INSTALL AND CALIBRATE
- 4 FLOW DIRECTION

The PIUSI K33 and K44 are the bestseller mechanical meters in this market. Reliable, easy to install and to calibrate, they are equipped with a nutating disk that allows them to be installed in all four flow directions. The display is available in both three or four digits, according to the model chosen.

### PERFORMANCE

| | |
|---|---|
| 20-120 L/MIN | 3,5 BAR MAX OPERATING |
| FLOW RATE | PRESSURE |
| ±1% | ±0,3% |
| ACCURACY | REPEATIBILITY |

K33

K44

K33 BIO

### PACKAGING

| CODICE | PESO | | PACKAGING | | | N. BOX / EUROPALLET | |
|---|---|---|---|---|---|---|---|
| | KG | LBS | MM | INCH | PCS/BOX | ✈ | 🚢 |
| **METER** | | | | | | | |
| 000550000 | 2,06 | 4,55 | 180X180X170 | - | 1 | 192 | 240 |
| 000551000 | 2,06 | 4,55 | 180X180X170 | - | 1 | 192 | 240 |
| 000552000 | 2,06 | 4,55 | 180X180X170 | - | 1 | 192 | 240 |
| 000553000 | 2,06 | 4,55 | 180X180X170 | - | 1 | 192 | 240 |
| 000560000 | 2,08 | 4,58 | 180X180X170 | - | 1 | 192 | 240 |
| 000561000 | 2,08 | 4,58 | 180X180X170 | - | 1 | 192 | 240 |
| 000562000 | 2,08 | 4,58 | 180X180X170 | - | 1 | 192 | 240 |
| 000563000 | 2,08 | 4,58 | 180X180X170 | - | 1 | 192 | 240 |
| F00550B00 | 2,06 | 4,55 | 180X180X170 | - | 1 | 192 | 240 |
| **PULSER** | | | | | | | |
| 00056500A | 2,14 | 4,73 | 180X180X170 | - | 1 | 192 | 240 |

ANY BIODIESEL | AIR | ANTIFREEZE | AdBlue® | BIODIESEL | DIESEL | FOOD | GASOLINE | GREASE | KEROSENE | OIL | WATER | WINDSCREEN

## CHART

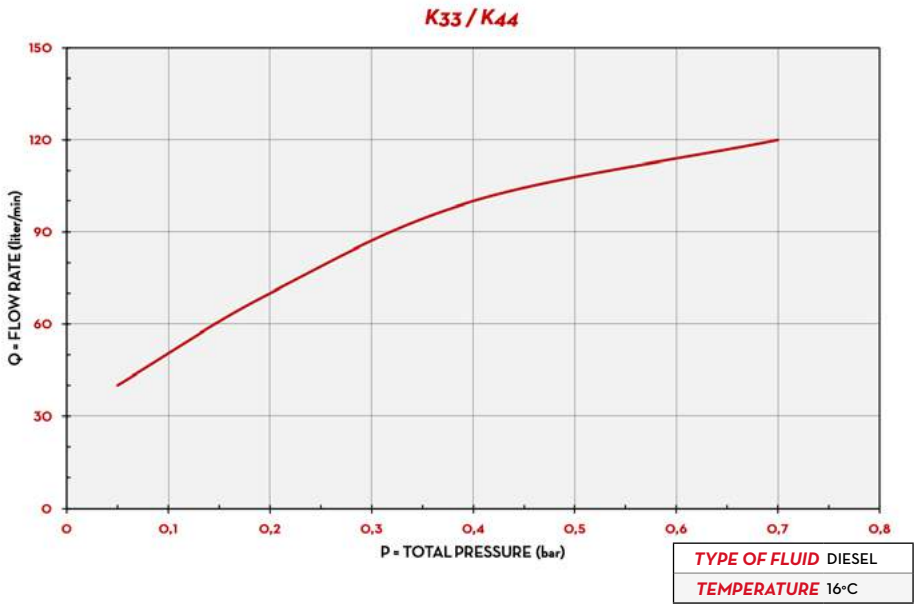


## IN THE BOX

- K33 / K44 METER
- INSTRUCTION MANUAL

## DETAILS

NUTATING DISK SYSTEM

4 FLOW DIRECTIONS

## DIMENSIONS

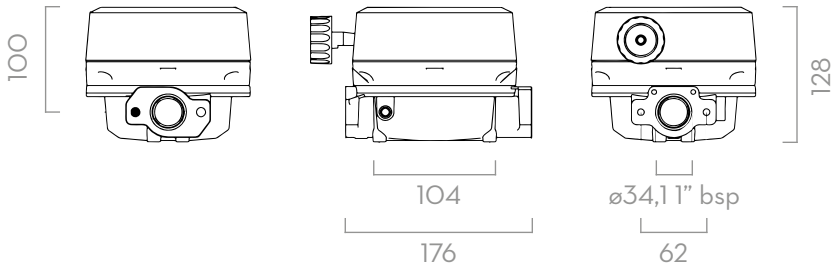


*Dimensions expressed in millimeters*

## MATERIALS

- BODY: ALUMINIUM
- NUTATING DISK CHAMBER: TECHNOPOLYMER

## TECHNICAL DATA

| CODE | DESCRIPTION | FLUIDS TYPE | FLOW DIRECTION | FLOW RATE | | PRESSURE | | PULSER | INLET / OUTLET |
|---|---|---|---|---|---|---|---|---|---|
| | | | | L/MIN | GPM | BAR | PSI | P/L (P/GAL) | |
| **METER** | | | | | | | | | |
| 000550000 | K33 VER. A | D | ← | 20 - 120 | 5 - 32 | 3,5 | 50 | - | 1" BSP |
| 000551000 | K33 VER. B | D | ↑ | 20 - 120 | 5 - 32 | 3,5 | 50 | - | 1" BSP |
| 000552000 | K33 VER. C | D | ↓ | 20 - 120 | 5 - 32 | 3,5 | 50 | - | 1" BSP |
| 000553000 | K33 VER. D | D | → | 20 - 120 | 5 - 32 | 3,5 | 50 | - | 1" BSP |
| 000560000 | K44 VER. A | D | ← | 20 - 120 | 5 - 32 | 3,5 | 50 | - | 1" BSP |
| 000561000 | K44 VER. B | D | ↑ | 20 - 120 | 5 - 32 | 3,5 | 50 | - | 1" BSP |
| 000562000 | K44 VER. C | D | ↓ | 20 - 120 | 5 - 32 | 3,5 | 50 | - | 1" BSP |
| 000563000 | K44 VER. D | D | → | 20 - 120 | 5 - 32 | 3,5 | 50 | - | 1" BSP |
| F00550B00 | K33 1" BSP VER.A B100 | D | ← | 20 - 120 | 5 - 32 | 3,5 | 50 | - | 1" BSP |
| **PULSER** | | | | | | | | | |
| 00056500A | K44 PULSER | D | → | 20 - 120 | 5 - 32 | 3,5 | 50 | 10 (38) | 1" BSP |

# K150

## FEATURES

- HEAVY DUTY CONDITIONS
- HIGH FLOW RATE
- BURSTING PRESSURE 28 BAR
- EASY READING
- 4 FLOW DIRECTIONS

K150 is expressly engineered to meet the market requirements of a meter suitable for flow rates superior than 120 l/min and that can be used both for fluids such as diesel and biodiesel, as well as in potentially explosives atmosphere; with gasoline for example. K150 is easy to calibrate and ready to use; its aluminium cover and sturdy body make this meter suitable for a wide arrange of application while guaranteeing the same precision and quality that have always featured PIUSI equipment. The mechanical display allows to read quickly the quantity dispensed. It can be installed everywhere thanks to the (optional) 1,5" flange kit.

### PERFORMANCE

| | |
|---|---|
| UP TO 25-150 L/MIN<br>FLOW RATE | 3,5 BAR MAX<br>OPERATING PRESSURE |
| ± 1%<br>ACCURACY | 0,3%<br>REPEATABILITY |

K150

K150 BIO

BIO diesel VERSION AVAILABLE

### PACKAGING

| CODE | WEIGHT | | PACKAGING | | | BOXES/EUROPALLET | |
|---|---|---|---|---|---|---|---|
| | KG | LBS | MM | INCH | PCS/BOX | ✈ | 🚢 |
| F00554A00 | 2,38 | 5,25 | 185X185X170 | 7,28X7,28X6,69 | 1 | 192 | 240 |
| F00554B00 | 2,38 | 5,25 | 185X185X170 | 7,28X7,28X6,69 | 1 | 192 | 240 |
| F00554C00 | 2,38 | 5,25 | 185X185X170 | 7,28X7,28X6,69 | 1 | 192 | 240 |
| F00554D00 | 2,38 | 5,25 | 185X185X170 | 7,28X7,28X6,69 | 1 | 192 | 240 |
| F00554B10 | 2,38 | 5,25 | 185X185X170 | 7,28X7,28X6,69 | 1 | 192 | 240 |

ANY BIODIESEL | AIR | ANTIFREEZE | AdBlue® | BIODIESEL | DIESEL | FOOD | GASOLINE | GREASE | KEROSENE | OIL | WATER | WINDSCREEN

## CHART

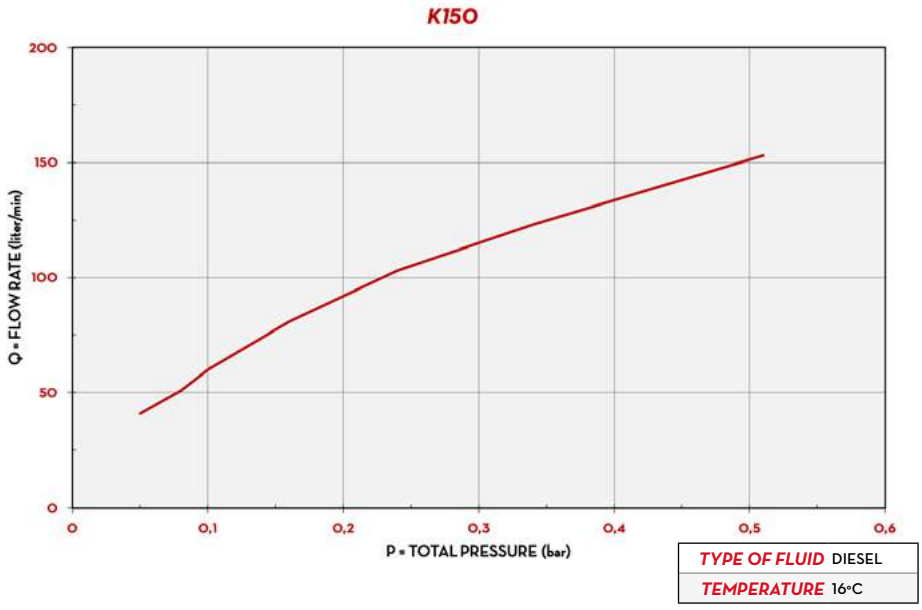


## IN THE BOX

- K150 METER
- INSTRUCTION MANUAL

## DETAILS

NUTATING DISK

4 FLOW DIRECTIONS

METALLIC COVER

## DIMENSIONS

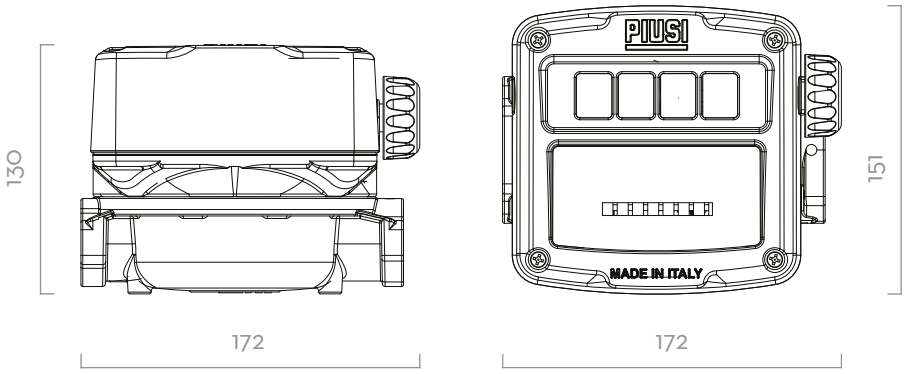


*Dimensions expressed in millimeters*

## MATERIALS

- BODY AND COVER: ALUMINIUM
- NUTATING DISK CHAMBER: TECHNOPOLYMER

## TECHNICAL DATA

| CODE | DESCRIPTION | FLUIDS TYPE | FLOW RATE | | FLOW DIRECTIONS | PRESSURE | | INLET/OUTLET |
|---|---|---|---|---|---|---|---|---|
| | | | L/MIN | GPM | | BAR | PSI | BSP |
| F00554A00 | K150 METER LITERS - 1" BSP VER.A | D | 25-150 | 6,6-40 | ← | 3,5 | 50 | 1" BSP |
| F00554B00 | K150 METER LITERS - 1" BSP VER.B | D | 25-150 | 6,6-40 | ↑ | 3,5 | 50 | 1" BSP |
| F00554C00 | K150 METER LITERS - 1" BSP VER.C | D | 25-150 | 6,6-40 | ↓ | 3,5 | 50 | 1" BSP |
| F00554D00 | K150 METER LITERS - 1" BSP VER.D | D | 25-150 | 6,6-40 | → | 3,5 | 50 | 1" BSP |
| F00554B10 | K150 - 1" BSP VER.A B100 | D | 25-150 | 6,6-40 | ← | 3,5 | 50 | 1" BSP |

THE PIUSI K150 IS A MECHANICAL METER EXPRESSLY ENGINEERED FOR HEAVY DUTY AND HIGH FLOW RATE APPLICATIONS. IT IS EASY TO CALIBRATE AND READY-TO-USE; ITS ALUMINIUM COVER AND STURDY BODY MAKE THIS METER SUITABLE FOR A WIDE ARRANGE OF APPLICATIONS WHILE GUARANTEEING THE SAME PRECISION AND QUALITY THAT HAVE ALWAYS BEEN A FEATURE OF PIUSI EQUIPMENT.

# K700

## FEATURES

- HEAVY DUTY CONDITIONS
- STURDY STRUCTURE
- BUSRSTING PRESSURE 30 BAR
- NO BATTERY NEEDED
- EASY TO INSTALL
- 2 FLOW DIRECTION

Medium-high flow rates require specific measuring equipment able to adapt precisely to the flow: It is the case of the oval gear mechanical flow meter PIUSI K700: a sturdy, reliable and easy to install equipment suitable for the most demanding environments. The meter displays 4-digit piece of equipment partial total that can show up to a maximum of 9999 liters.

### PERFORMANCE

| | |
|---|---|
| 40-220 L/MIN<br>FLOW RATE | 10 BAR MAX OPERATING<br>PRESSURE |
| ± 1,5%<br>ACCURACY | 0,3%<br>REPEATABILITY |

K700

### PACKAGING

| CODE | WEIGHT | | PACKAGING | | | N. BOXES / EUROPALLET | |
|---|---|---|---|---|---|---|---|
| | KG | LBS | MM | INCH | PCS/BOX | ✈ | 🚢 |
| F00540000 | 5,8 | 12,8 | 240X240X275 | - | 1 | 48 | 72 |
| F00540020 | 5,8 | 12,8 | 240X240X275 | - | 1 | 48 | 72 |
| F00540030 | 5,8 | 12,8 | 240X240X275 | - | 1 | 48 | 72 |
| F00540040 | 5,8 | 12,8 | 240X240X275 | - | 1 | 48 | 72 |

ANY BIODIESEL | AIR | ANTIFREEZE | AdBlue® | BIODIESEL | **DIESEL** | FOOD | GASOLINE | GREASE | KEROSENE | OIL | WATER | WINDSCREEN

## CHART

### K700

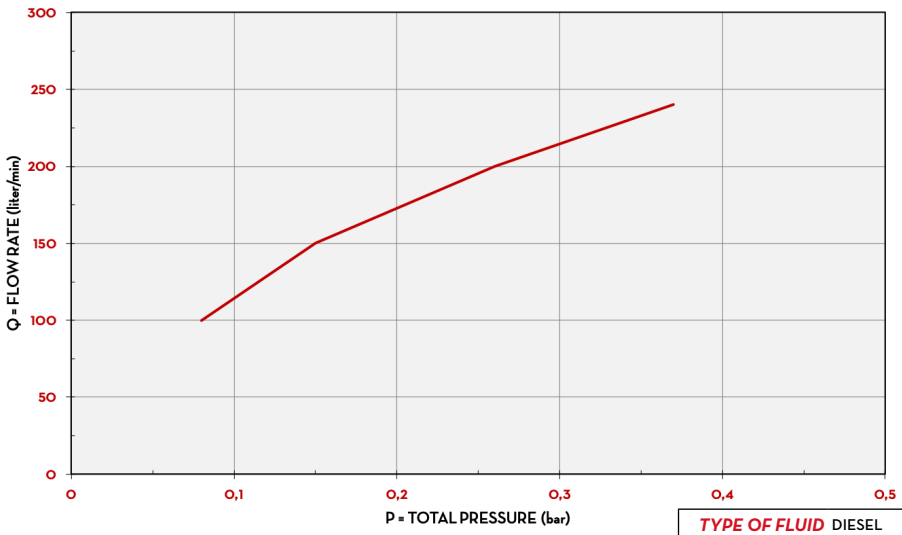


| | |
|---|---|
| TYPE OF FLUID | DIESEL |
| TEMPERATURE | 8°C |

## IN THE BOX

- K700 METER
- INSTRUCTION MANUAL

## DETAILS

4-DIGITS

OVAL GEARS

4 FLOW DIRECTIONS

## MATERIALS

- BODY: ALUMINIUM
- GEARS: TECHNOPOLYMER

## DIMENSIONS

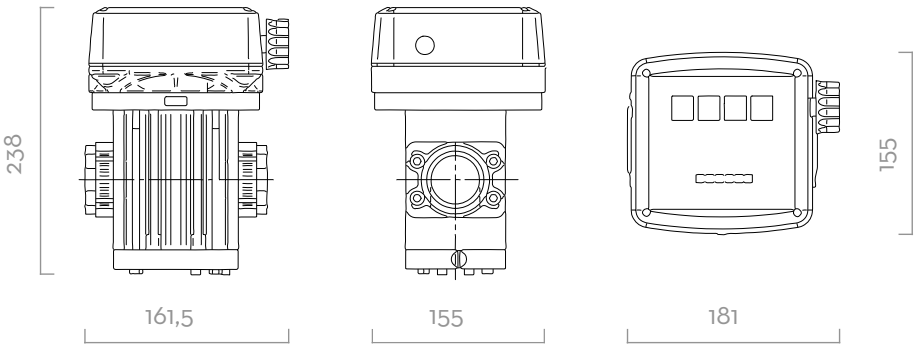


*Dimensions expressed in millimeters*

## TECHNICAL DATA

| CODE | DESCRIPTION | FLUIDS TYPE | FLOW DIRECTION | FLOW RATE | | PRESSURE | | INLET FILTER | INLET / OUTLET |
|---|---|---|---|---|---|---|---|---|---|
| | | | | L/MIN | GPM | BAR | PSI | | |
| F00540000 | K700 VER. A | D | ← | 40 - 220 | 5 - 53 | 10 | 142 | YES | 1" 1/2 BSP |
| F00540020 | K700 VER. B | D | ↑ | 40 - 220 | 5 - 32 | 10 | 142 | YES | 1" 1/2 BSP |
| F00540030 | K700 VER. C | D | ↓ | 40 - 220 | 5 - 53 | 10 | 142 | YES | 1" 1/2 BSP |
| F00540040 | K700 VER. D | D | → | 40 - 220 | 5 - 32 | 10 | 142 | YES | 1" 1/2 BSP |

# METERS ACCESSORIES

## ELECTRONIC METERS

| K24 PULSER | CODICE | DESCRIZIONE | |
|---|---|---|---|
| | F0049501A | REMOTE DISPLAY PULS OUT UNIVERSAL | F0049501A F0049502A |
| | F0049502A | UNIVERSAL REMOTE DISPLAY PULS IN | |

| K600/3 PULSER | CODICE | DESCRIZIONE | |
|---|---|---|---|
| | F0049501A | DISPLAY REMOTO PULS OUT UNIVERSALE | F0049501A F0049502A |
| | F0049502A | DISPLAY REMOTO PULS IN UNIVERSALE | |
| | F1175200B | REMOTE DISPLAY PULS OUT K600/3 LT SEL | |

| K600/4 PULSER | CODICE | DESCRIZIONE | |
|---|---|---|---|
| | F0049501A | REMOTE DISPLAY PULS OUT UNIVERSAL | F0049501A F0049502A F1175300B |
| | F0049502A | UNIVERSAL REMOTE DISPLAY PULS IN | |
| | F1175300B | REMOTE DISPLAY PULS OUT K600/4 LT SEL | |

| K700 | CODICE | DESCRIZIONE | |
|---|---|---|---|
| | F0049501A | REMOTE DISPLAY PULS OUT UNIVERSAL | F0049501A F0049502A F1175400B |
| | F0049502A | UNIVERSAL REMOTE DISPLAY PULS IN | |
| | F1175400B | REMOTE DISPLAY PULS OUT K700 LT SEL | |

| K900 | CODICE | DESCRIZIONE | |
|---|---|---|---|
| | R1152600A | KIT DR K900 W PULS OUT | R1152600A R1146400A |
| | R1146400A | KIT DR K900 W/O PULS OUT | |

ATTENTION
TRAILER SERVICE CHECKLIST
VISUAL INSPECTION
U BOLTS & WHEEL NUTS TO BE TORQUED
PIUSI

# NOZZLES

# A60 / A140 ATEX

## FEATURES

- AUTOMATIC
- READY TO USE
- STURDY DESIGN

Expressly engineered to meet the strictest requirements of the ATEX/IECEx regulations, the PIUSI A60/A140 ATEX is an automatic nozzle suitable to dispense fluids - such as gasoline, kerosene, diesel and others - in potentially explosive atmospheres. It is fitted with a structural component that automatically stops dispensing when the tank is full.

### PERFORMANCE

| | |
|---|---|
| UP TO 140 L/MIN | 1" BSP |
| FLOW RATE | INLET |
| A60 ø21MM | A140 ø29MM |
| SPOUT | SPOUT |

Atex II 2 G

A60 ATEX

Atex II 2 G

A140 ATEX

### PACKAGING

| CODE | | WEIGHT | | PACKAGING | | | BOXES/EUROPALLET | |
|---|---|---|---|---|---|---|---|---|
| WITHOUT SWIVEL | WITH SWIVEL | KG | LBS | MM | INCH | PCS/BOX | ✈ | 🚢 |
| **A60 ATEX** | | | | | | | | |
| - | F00613020 | 1,25 | 2,76 | 460X200X80 | 181X78X31 | 1 | - | - |
| **A140 ATEX** | | | | | | | | |
| F22675000 | - | 2,00 | 4,41 | 460X200X80 | 181X78X31 | 1 | - | - |

ANY BIODIESEL AIR ANTIFREEZE AdBlue® BIODIESEL DIESEL FOOD GASOLINE GREASE KEROSENE OIL WATER WINDSCREEN

## CHART

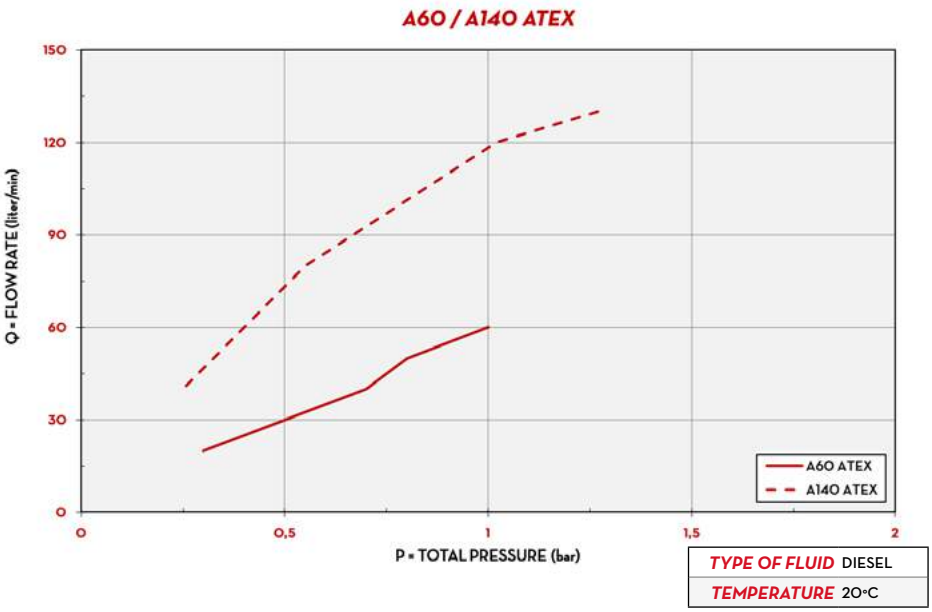


| | |
|---|---|
| TYPE OF FLUID | DIESEL |
| TEMPERATURE | 20°C |

## IN THE BOX

- A60 / A140 ATEX NOZZLE
- INSTRUCTION MANUAL

## DETAILS

AUTOMATIC STOP

F 1" SWIVEL (ONLY A60 ATEX)

## MATERIALS

- BODY: ALUMINIUM
- SEAL: NBR

## TECHNICAL DATA

| CODE | | DESCRIPTION | FLUIDS TYPE | FLOW RATE | | INLET | | SPOUT |
|---|---|---|---|---|---|---|---|---|
| WITHOUT SWIVEL | WITH SWIVEL | | | L/MIN | GPM | WITHOUT SWIVEL BSP | WITH SWIVEL BSP | EXT. Ø MM |
| **A60 ATEX** | | | | | | | | |
| - | F00613020 | A60 ATEX | D G K | 60 | 16 | - | F1" | 21 |
| **A140 ATEX** | | | | | | | | |
| F22675000 | - | (EX) AUTOMATIC NOZZLE A140 W\OUT SWIVEL | D G K | 140 | 37 | F1" | - | 29 |

# A60 / A80 / A120 / A140

## FEATURES

- AUTOMATIC
- READY TO USE
- STURDY DESIGN

Among the range of nozzles for fuel dispensing, PIUSI A60/A80/A120/A140 consist of a range of automatic devices for flow rates up to 140 l/min fitted with an inner device that automatically stops the fluid dispensing when the tank is full. These nozzles also include a swivel connector.

### PERFORMANCE

| | |
|---|---|
| UP TO 140 L/MIN | 1" BSP |
| FLOW RATE | INLET |
| A60 20/24MM | A80/A120/A140 29MM |
| SPOUT | SPOUT |

### PACKAGING

| CODE | | WEIGHT | | PACKAGING | | | BOXES/EUROPALLET | |
|---|---|---|---|---|---|---|---|---|
| WITHOUT SWIVEL | WITH SWIVEL | KG | LBS | MM | INCH | PCS/BOX | ✈ | 🚢 |
| **A60** | | | | | | | | |
| - | F00603060 | 1,25 | 2,76 | 360X360X280 | 14X14X11 | 1 | - | - |
| - | F00602020 | 1,20 | 2,65 | 360X360X280 | 14X14X11 | 1 | - | - |
| - | F00613A00 | 1,30 | 2,87 | 360X360X280 | 14X14X11 | 1 | - | - |
| **A80** | | | | | | | | |
| - | F00604030 | 1,93 | 4,25 | 360X360X280 | 14X14X11 | 1 | - | - |
| **A120** | | | | | | | | |
| - | F00610020 | 1,93 | 4,25 | 360X360X280 | 14X14X11 | 1 | - | - |
| - | F00614A00 | 1,65 | 3,64 | 360X360X280 | 14X14X11 | 1 | - | - |
| - | F00610B00 | 1,93 | 4,25 | 360X360X280 | 14X14X11 | 1 | - | - |
| **A140** | | | | | | | | |
| - | F00610200 | 2,00 | 4,41 | 460X200X80 | 181X78X31 | 1 | - | - |
| **A70** | | | | | | | | |
| - | F00603B00 | 1,25 | 2,76 | 360X360X280 | 14X14X11 | 1 | - | - |

ANY BIODIESEL | AIR | ANTIFREEZE | AdBlue® | BIODIESEL | DIESEL | FOOD | GASOLINE | GREASE | KEROSENE | OIL | WATER | WINDSCREEN

## CHART

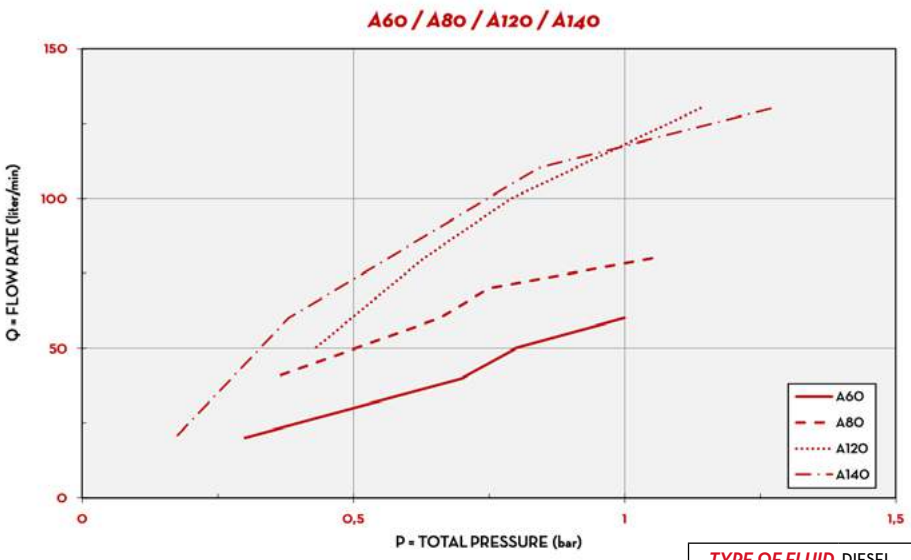


| | |
|---|---|
| TYPE OF FLUID | DIESEL |
| TEMPERATURE | 10/20 °C |

## IN THE BOX

- A60/A80/A120/A140 NOZZLE
- INSTRUCTION MANUAL

## DETAILS

AUTOMATIC STOP

F 1" SWIVEL

## MATERIALS

- BODY: ALUMINIUM
- SEAL: VITON

## TECHNICAL DATA

| CODE | | DESCRIPTION | FLUIDS TYPE | FLOW RATE | | INLET | | SPOUT |
|---|---|---|---|---|---|---|---|---|
| WITHOUT SWIVEL | WITH SWIVEL | | | L/MIN | GPM | WITHOUT SWIVEL BSP | WITH SWIVEL BSP | EXT. Ø MM |
| **A60** | | | | | | | | |
| - | F00603060 | AUTOMATIC NOZZLE. A60 W/SWIVEL 3/4" BSP | D G | 60 | 16 | F3/4" | F1" | 24 |
| - | F00602020 | AUTO. NOZZLE A60 W/SWIVEL 3/4" UNLEADED | D G | 60 | 16 | F3/4" | F1" | 20 |
| - | F00613A00 | AUTO. NOZZLE A60 EN 13012 W/SWIVEL 3/4" | D | 70 | 19 | F3/4" | F1" | 24 |
| **A80** | | | | | | | | |
| - | F00604030 | AUTOMATIC NOZZLE A80 W/SWIVEL 1" BSP | D G | 90 | 24 | - | F1" | 29 |
| **A120** | | | | | | | | |
| - | F00610020 | AUTOMATIC NOZZLE. A120 W/SWIVEL 1" BSP | D G | 120 | 32 | - | F1" | 29 |
| - | F00614A00 | AUTO NOZZLE A120 EN 13012 W/SWIVEL 1" | D | 120 | 32 | - | F1" | 29 |
| - | F00610B00 | AUTOMATIC NOZZLE A120 W/SWIV. 1"BSP B100 | D | 120 | 32 | - | F1" | 29 |
| **A140** | | | | | | | | |
| - | F00610200 | AUTOMATIC NOZZLE. A140 W/SWIVEL 1" BSP | D | 140 | 37 | - | F1" | 29 |
| **A70** | | | | | | | | |
| - | F00603B00 | AUTOMATIC NOZZLE A70 1" BSP B100 | D | 70 | 19 | - | F1" | 24 |

# A280

## FEATURES

- AUTOMATIC
- READY TO USE
- HEAVY DUTY CONDITIONS
- STURDY STRUCTURE

The PIUSI A280 is the biggest nozzle among the PIUSI range of automatic fuel nozzles with its flow rate up to 280 l/min and spout OD 38,5 mm.
Fully automatic thanks to the structural device that stops dispensing when the tank is full; it comes with a built-in swivel to guarantee maximum versatility.

A280

### PERFORMANCE

| | |
|---|---|
| UP TO 280 L/MIN<br>FLOW RATE | 1" 1/2 BSP<br>INLET |
| 38,5MM OD SPOUT<br>A280 | |

### PACKAGING

| CODE | WEIGHT | | PACKAGING | | | N. BOXES / EUROPALLET | |
|---|---|---|---|---|---|---|---|
| WITH SWIVEL | KG | LBS | MM | INCH | PCS/BOX | ✈ | 🚢 |
| F13249000 | 3,30 | 7,28 | - | - | 1 | - | - |

## CHART

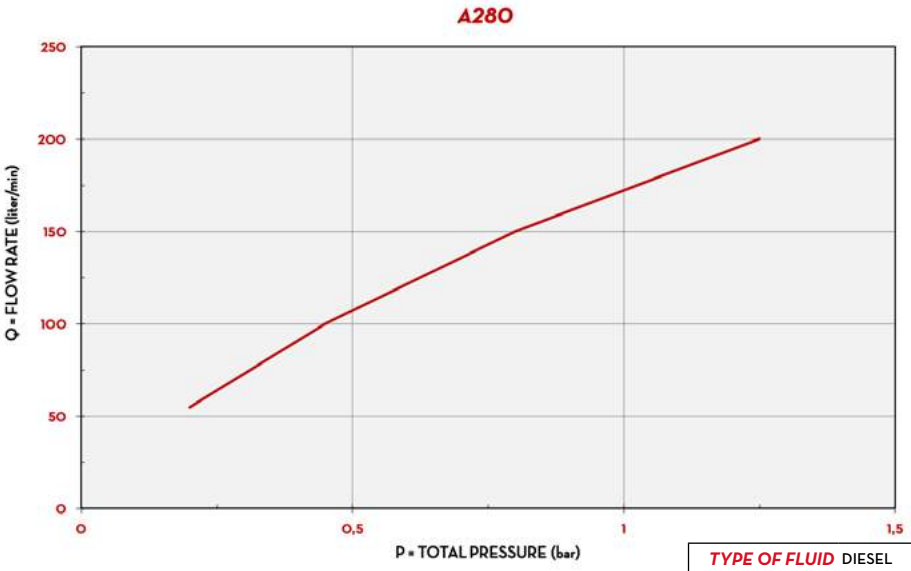


| | |
|---|---|
| TYPE OF FLUID | DIESEL |
| TEMPERATURE | 10°C |

## IN THE BOX

- A280 NOZZLE
- SWIVEL 1" 1/2 BSP

## DETAILS

AUTOMATIC STOP

F 1" SWIVEL

## MATERIALS

- BODY: ALUMINIUM
- SEAL: VITON

## TECHNICAL DATA

| CODE | DESCRIPTION | FLUIDS TYPE | FLOW RATE | | INLET | | SPOUT |
|---|---|---|---|---|---|---|---|
| WITH SWIVEL | | | L/MIN | GPM | WITHOUT SWIVEL BSP | WITH SWIVEL BSP | EXT. Ø MM |
| F13249000 | AUTOMATIC NOZZLE A280 1" 1/2 BSP | D | 280 | 74 | - | 1 1/2" | 38,5 |

# SELF 2000 / SELF 3000

## FEATURES

- MANUAL
- VERSATILE
- HIGH EFFICIENCY
- LEVER PROTECTION

The PIUSI SELF 2000 / SELF 3000 manual nozzles perform the maximum efficiency thanks to the low-flow resistance and the wide range of applications including transfer systems run by gravity. They are supplied with removable lever protection and connectors.

SELF 2000 DIESEL

### PERFORMANCE

| UP TO 150 L/MIN | 20/25MM OD SPOUT |
|---|---|
| FLOW RATE | SELF 2000 / SELF 3000 |

SELF 3000 DIESEL/GASOLINE

KUNSTSTOFF-ZAPFVENTIL WASSER/DIESEL

### PACKAGING

| CODE | WEIGHT | | PACKAGING | | | N. BOXES / EUROPALLET | |
|---|---|---|---|---|---|---|---|
| | KG | LBS | MM | INCH | PCS/BOX | ✈ | 🚢 |
| 00063900A | 0,7 | 1,5 | 400X250X200 | 16X11X7,8 | 1 | | |
| 00064900A | 0,7 | 1,5 | 400X250X200 | 16X11X7,8 | 1 | | |
| 00064902A | 0,7 | 1,5 | 400X250X200 | 16X11X7,8 | 1 | | |
| 00065001A | 0,7 | 1,5 | 400X250X200 | 16X11X7,8 | 1 | | |
| 00065600A | 0,7 | 1,5 | 400X250X200 | 16X11X7,8 | 1 | | |
| F00641120 | 0,7 | 1,5 | 400X250X200 | 16X11X7,8 | 1 | | |
| F00641130 | 0,7 | 1,5 | 400X250X200 | 16X11X7,8 | 1 | | |
| F0065000A | 0,7 | 1,5 | 400X250X200 | 16X11X7,8 | 1 | | |
| F00650020 | 0,7 | 1,5 | 400X250X200 | 16X11X7,8 | 1 | | |
| F0063000A | 0,3 | 0,7 | - | - | 1 | | |
| F00641B00 | 0,7 | 1,5 | 400X250X200 | 16X11X7,8 | 1 | | |

ANY BIODIESEL AIR ANTIFREEZE AdBlue® BIODIESEL DIESEL FOOD GASOLINE GREASE KEROSENE OIL WATER WINDSCREEN

## CHART

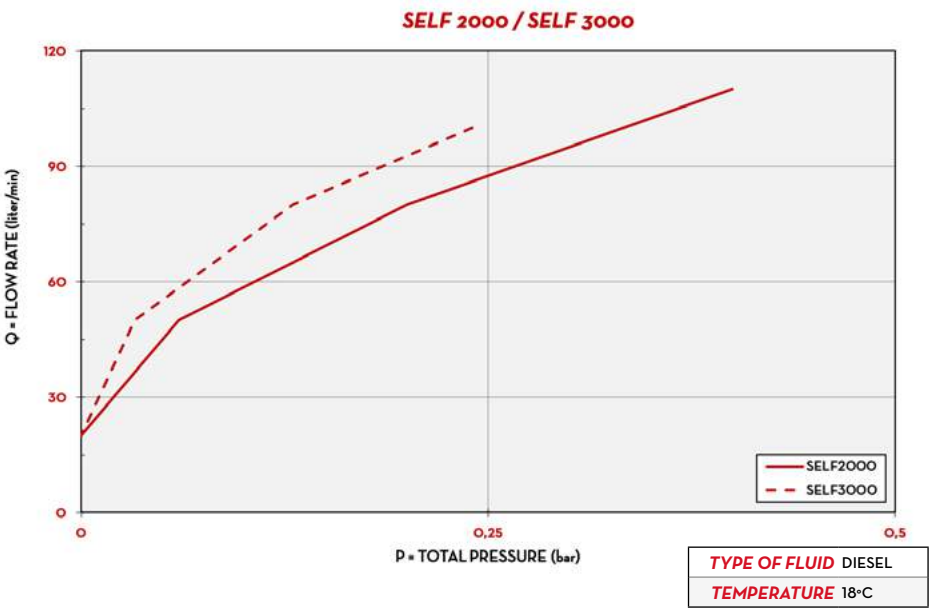


## IN THE BOX

- SELF 2000/ SELF 3000 NOZZLE

## DETAILS

LEVER PROTECTION

ROTATING SWIVEL

## MATERIALS

SELF 2000 & SELF 3000

- BODY: ALUMINIUM
- SEAL: NBR70SH

PLASTIC NOZZLE

- BODY: PP+FV
- SEAL: NBR

## TECHNICAL DATA

| CODE | DESCRIPTION | FLUIDS TYPE | FLOW RATE | | INLET | | SPOUT |
|---|---|---|---|---|---|---|---|
| | | | L/MIN | GPM | SWIVEL (THREADS) | Ø BSP | EXT. Ø MM |
| 00063900A | SELF 2000 1" BSP UNLEADED | D G O | 120 | 32 | INTERNAL | 1" BSP | 20 |
| 00064900A | SELF 2000 3/4" BSP | D O | 120 | 32 | INTERNAL | 3/4" BSP | 25 |
| 00064902A | SELF 2000 3/4" BSP UNLEADED | D G O | 120 | 32 | INTERNAL | 3/4" BSP | 20 |
| 00065001A | SELF 3000 1" BSP UNLEADED | D O G | 150 | 40 | INTERNAL | 1" BSP | 20 |
| 00065600A | SELF 2000 1" BSP SPOUT 25 MM | D O | 120 | 32 | INTERNAL | 1" BSP | 25 |
| F00641120 | SELF 2000 W/HOSE TAIL D.20 SPOUT 25 MM | D O | 120 | 32 | INTERNAL | 3/4" BSP | 25 |
| F00641130 | SELF 2000 1" BSP | D O | 120 | 32 | INTERNAL | 1" BSP | 25 |
| F0065000A | SELF 3000 1" BSP LEADED SPOUT | D O | 150 | 40 | INTERNAL | 1" BSP | 25 |
| F00650020 | SELF 3000 1" BSP LEADED SPOUT S/P | D G O W | 150 | 40 | INTERNAL | 1" BSP | 25 |
| F0063000A | PLASTIC NOZZLE BLACK W/SWIVEL 1" BSP | D O W | 80 | 21 | INTERNAL | 1" BSP | 34 |
| F00641B00 | SELF 2000 1" BSP B100 | | 120 | 32 | INTERNAL | 1" BSP | 20 |

# NOZZLES ACCESSORIES

## AUTOMATIC NOZZLES

| A60 / A80 / A120 / A140 | CODE | DESCRIPTION | |
|---|---|---|---|
| | F00623100 | SWIVEL 34.1 M W/FILTER | F00623100 |
| | F0062500A | SWIVEL 3/4IN X 20MM§ | |

# FILTRATION

# FILTROLL

## FEATURES

- DOUBLE-STAGE FILTRATION
- SPIRAL TUBE
- EASY TO HANDLE
- LARGE-DIAMETER WHEELS

The PIUSI FILTROLL is an innovative portable unit that provides a complete double filtering capacity of any kind of tank while absorbing water and impurities. The built-in sturdy trolley allows the operator to easily handle this device in any condition. It is equipped with suction pipe and integrated bottom valve.

FILTROLL

### PERFORMANCE

| | |
|---|---|
| UP TO 56 L/MIN<br>FLOW RATE | AC/DC VOLTAGE<br>POWER |
| 30µ WATER ABSORPTION<br>FILTERING | 5µ IMPURITIES<br>FILTERING |

### PACKAGING

| CODE | WEIGHT | | PACKAGING | | |
|---|---|---|---|---|---|
| | KG | LBS | MM | INCH | PCS/BOX |
| F00506000 | 35 | 77,2 | 790X590X590 | 31,1X23,2X23,2 | 1 |
| F0050606A | 40 | 88,2 | 790X590X590 | 31,1X23,2X23,2 | 1 |

## CHART

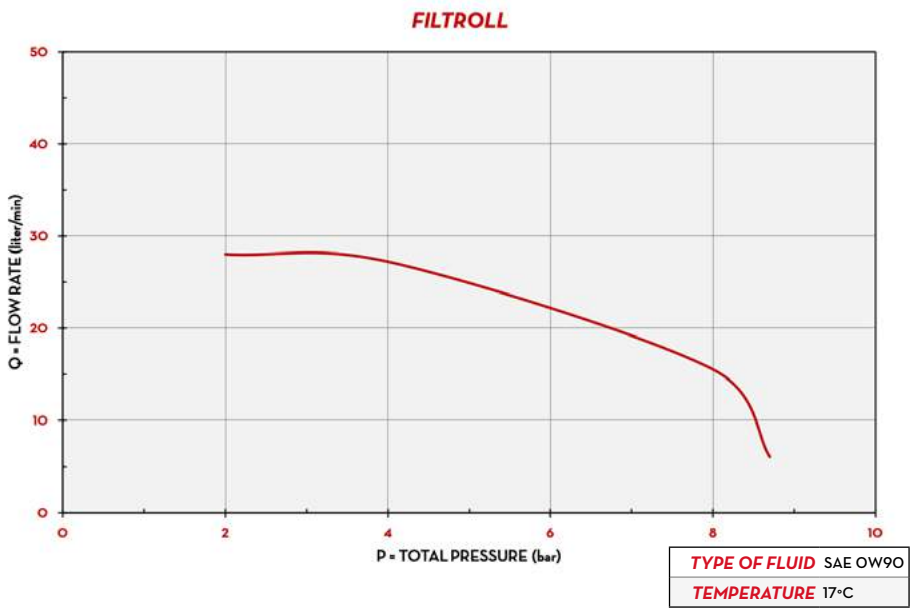


| | |
|---|---|
| TYPE OF FLUID | SAE OW90 |
| TEMPERATURE | 17°C |

## IN THE BOX

- FILTROLL UNIT
- SUCTION HOSE
- DELIVERY HOSE
- NOZZLE
- INSTRUCTION MANUAL

## DETAILS

TWO-STEP FILTRATION

WATER/IMPURITIES FILTERS

## DIMENSIONS

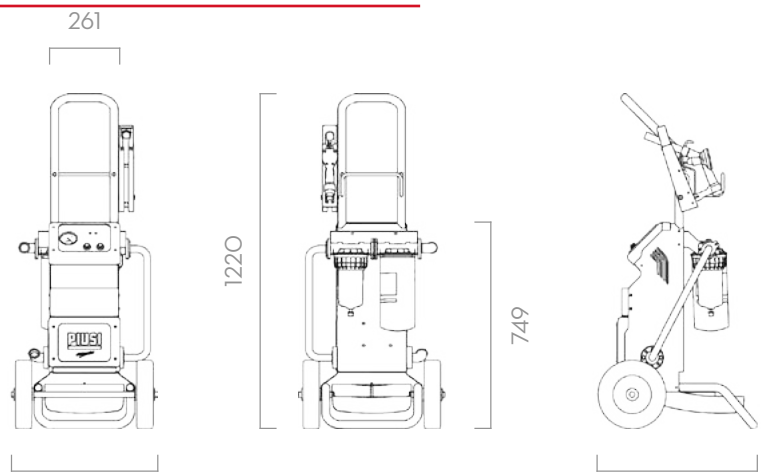


*Dimensions expressed in millimeters*

## MATERIALS

- BODY: CAST IRON
- ROTOR: SINTHERED STEEL
- VANES: TECHNOPOLYMER
- SHAFT: STEEL
- FILTER: ABSORBENT FILTERING PAPER

## TECHNICAL DATA

| CODE | DESCRIPTION | FLUIDS TYPE | FLOW RATE | | VOLTAGE | | | PUMP | HOSE LENGTH | |
|---|---|---|---|---|---|---|---|---|---|---|
| | | | L/MIN | GPM | AC V./HZ DC VOLT | POWER WATT | AMP. MAX. | TYPE | DELIVERY M/FT. | SUCTION M/FT |
| F00506000 | FILTROLL DIESEL | D | 56 | 14,8 | 230/50-60 | 350/600 | 3/6 | PANTH. 56 | 4 / 13,1 | 3 / 9,8 |
| F0050606A | FILTROLL 12V DIESEL | D | 56 | 14,8 | 12 | 300 | 35 | PANTH. DC | 4 / 13,1 | 4 / 13,1 |

### FILTER CARTRIDGE

| CODE | DESCRIPTION | MICRO µm | EFFICIENCY |
|---|---|---|---|
| F0061102A | WATER CAPTOR CART. 150 L/MIN | 30 | 200 |
| F0061103O | CLEAR CAPTOR CARTRIDGE | 5 | 2 |

### FILTER HEAD

| | | | |
|---|---|---|---|
| F1693400A | FILTER HEAD 70/100LT W/MANOM | - | - |
| F15744000 | CLEAR CAPTOR FILTER HEAD | - | - |

AVAILABLE IN VERSION 230V/60HZ, 120V/60HZ

# GASOLINE FILTER E25

## FEATURES

- REPLACEABLE CARTRIDGE
- HIGH FILTRATION EFFICIENCY
- COMPACT DESIGN
- ATEX CERTIFICATION ZONE 2

Spin-on filter designed to ensure fuel quality and optimize system performance. This ATEX (Zone 2) certified cartridge filter is ideal for applications with **gasoline up to E25 and diesel up to B20**, offering effective filtration against solid contaminants and water

### PERFORMANCE

| | |
|---|---|
| UP TO **70 L/MIN** | **12 BAR** MAX |
| FLOW RATE | OPERATING PRESSURE |
| **85%** | |
| EFFICIENCY | |

GASOLINE FILTER E25 WITH FILTER HEAD

### PACKAGING

| CODE | WEIGHT | PACKAGING | | |
|---|---|---|---|---|
| | KG | DIMENSIONS MM | CARTRIDGE PSC / BOX | FILTER HEAD PCS/BOX |
| F26169010 | 2,8 | 390X140X290 | 2 | 1 |
| F26169000 | 11,2 | 405X230X315 | 12 | - |

## PRODUCTS

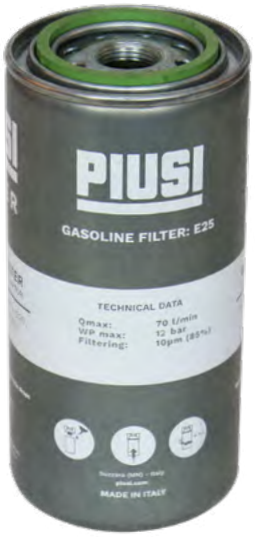


CARTRIDGE GASOLINE FILTER E25

## IN THE BOX

- FILTER HEAD
- GASOLINE FILTER E25 CARTRIDGE

## DETAILS

FILTER HEAD

GASOLINE FILTER CARTRIDGE

FKM SEALS, VITON®

ATEX APPROVED

## MATERIALS

- FILTER: ABSORBENT FILTERING PAPER

## DIMENSIONS

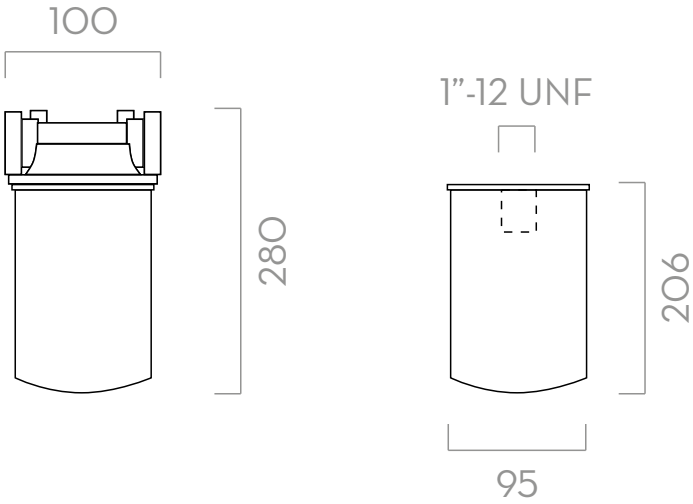


*Dimensions expressed in millimeters*

## TECHNICAL DATA

| CODE | DESCRIPTION | FLUIDS TYPE | FLOW RATE | | INLET / OUTLET | WATER ABSORBING | EFFICIENCY | MICRO | MAX PRESSURE |
|---|---|---|---|---|---|---|---|---|---|
| | | | L/MIN | GPM | BSP | | | µm | BAR |
| F26169010 | (EX) GASOLINE FILTER:E25 HEAD & 2 CARTD | D G | 70 | 18,5 | 1" | YES | 85% | 10 | 12 |
| F26169000 | (EX) GASOLINE FILTER:E25 CARTD 12 PCS | D G | 70 | 18,5 | - | YES | 85% | 10 | 12 |

# WATER CAPTOR

## FEATURES

- *REPLACEABLE CARTRIDGE*
- *HIGH EFFICIENCY*
- *SMALL SIZE*

The PIUSI WATER CAPTOR is a filter that absorbs any residual water particles that may be present in the fluid. The innovative cartridge needs to be replaced when filtering capacity is reduced due to the amount of water particles already absorbed. Available both for 70 or 150 l/min flow rates, these filters are also available with 1" inch fitting.

### PERFORMANCE

| | |
|---|---|
| UP TO 150 L/MIN | 3,5 BAR MAX |
| FLOW RATE | OPERATING PRESSURE |
| 200β/30µ | |
| FILTERING CAPACITY | |

*WATER CAPTOR 150 L/MIN*

### PACKAGING

| CODE | WEIGHT | PACKAGING | | |
|---|---|---|---|---|
| | KG | DIMENSIONS MM | CARTRIDGE PSC / BOX | FILTER HEAD PCS/BOX |
| *WATER CAPTOR* | | | | |
| F00611A0A | 2,4 | 390X285X140 | 2 | 1 |
| F00611A1A | 2,3 | 390X285X140 | 1 | 1 |
| *WATER CAPTOR CARTRIDGE* | | | | |
| F0061101B | 9,8 | 420X320X250 | 12 | - |
| F0061102A | 9,7 | 350X350X360 | 6 | - |
| *WATER CAPTOR FILTER HEAD* | | | | |
| F14640000 | - | 357X357X275 | - | 1 |
| F15743000 | 0,9 | 200X120X240 | - | 1 |

## PRODUCTS

150 L/MIN WATER CAPTOR
WITH WATER ABSORPTION

70 L/MIN WATER CAPTOR
WITH WATER ABSORPTION

## IN THE BOX

- FILTER HEAD
- WATER CAPTOR CARTRIDGE

## DETAILS

FILTER HEAD

WATER CAPTOR CARTRIDGE

## DIMENSIONS

| CODE | A (MM) | B (MM) | C (MM) | D (MM) | F |
|---|---|---|---|---|---|
| F00611A0A | - | 100 | 280 | 95 | - |
| F00611A1A | - | 171 | 340 | 120 | - |
| F0061101B | 220 | - | - | 95 | 1"-12 UNF |
| F0061102A | 275 | - | - | 120 | 1"1/2-16 UNF |
| F14640000 | - | 100 | - | - | 1"-12 UNF |
| F15743000 | - | 171 | - | - | 1"1/2-16 UNF 1"1/4 BSP |

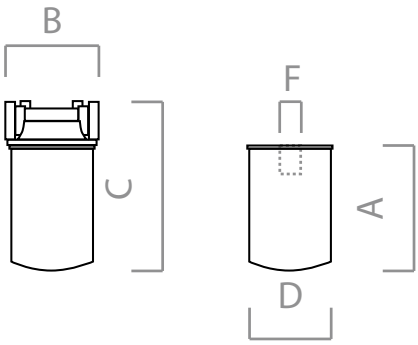


*Dimensions expressed in millimeters*

## MATERIALS

- FILTER: ABSORBENT FILTERING PAPER

## TECHNICAL DATA

| CODE | DESCRIPTION | FLUIDS TYPE | FLOW RATE L/MIN | FLOW RATE GPM | INLET / OUTLET BSP | WATER ABSORBING | EFFICIENCY ß | MICRO µm | PRESSURE BAR |
|---|---|---|---|---|---|---|---|---|---|
| **WATER CAPTOR** | | | | | | | | | |
| F00611A0A | WATER CAPTOR FILTER 70L/MIN - 2 CARTD IT | D | 70 | 18,5 | 1" | YES | 200 | 30 | 3,5 |
| F00611A1A | WATER CAPTOR FILTER 150 L/MIN 1 CART IT | D | 150 | 39,6 | 1" | YES | 200 | 30 | 3,5 |
| **WATER CAPTOR CARTRIDGE** | | | | | | | | | |
| F0061101B | WATER CAPTOR CARTD. 70 L/MIN (12PCS) IT | D | 70 | 18,5 | - | YES | 200 | 30 | 3,5 |
| F0061102A | WATER CAPTOR CART. 150 L/MIN (6PCS) IT | D | 150 | 39,6 | - | YES | 200 | 30 | 3,5 |
| **WATER CAPTOR FILTER HEAD** | | | | | | | | | |
| F14640000 | FILTER HEAD UNF 70 L/MIN | D | - | - | 1" | NO | - | - | - |
| F15743000 | FILTER HEAD 70/100LT | D | - | - | 1" | NO | - | - | - |

# CLEAR CAPTOR

## FEATURES

- *REPLACEABLE CARTRIDGE*
- *HIGH EFFICIENCY*
- *SMALL SIZE*

The PIUSI CLEAR CAPTOR is a range of cartridge filters that can be applied both on suction or delivery flow directions. They are equipped with a high-performance cartridge and a plastic container to collect all eventual impurities or water particles that may be present in the fluid. Thanks to the valve at the bottom of the container, it is possible to remove contaminations quickly and safely to ensure the maximum possible filter life.

### PERFORMANCE

| | |
|---|---|
| UP TO 100 L/MIN | 5 BAR MAX |
| FLOW RATE | OPERATING PRESSURE |
| 2β/5µ | |
| FILTERING CAPACITY | |

### PACKAGING

| CODE | WEIGHT | PACKAGING | | |
|---|---|---|---|---|
| | KG | DIMENSIONS MM | CARTRIDGE PSC / BOX | FILTER HEAD PCS/BOX |
| **CLEAR CAPTOR** | | | | |
| F00611B00 | 2,3 | 390X285X140 | 2 | 1 |
| F00611B10 | 2,0 | 390X285X140 | 2 | 1 |
| F00611B60 | 2,3 | 390X285X140 | 1 | 1 |
| **CLEAR CAPTOR CARTRIDGE** | | | | |
| F00611030 | 1,9 | 190X190X240 | 6 | - |
| F00611040 | 1,2 | 190X190X240 | 6 | - |
| F00611060 | 0,2 | 190X190X240 | 1 | 1 |
| **CLEAR CAPTOR FILTER HEAD** | | | | |
| F15744000 | 1,0 | 200X120X240 | - | 1 |

ANY BIODIESEL | AIR | ANTIFREEZE | AdBlue® | BIODIESEL | DIESEL | FOOD | GASOLINE | GREASE | KEROSENE | OIL | WATER | WINDSCREEN

## PRODUCTS

## IN THE BOX

- FILTER CARTRIDGE
- FILTER HEAD
- ADDITIONAL CARTRIDGE (WHERE PROVIDED)

## DETAILS

STRAINER CARTRIDGE

IMPURITIES PAPER CARTRIDGE

WATER PAPER CARTRIDGE

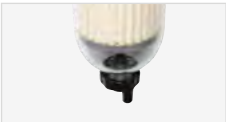
DRAIN VALVE

## DIMENSIONS

| CODICE | A (MM) | B (MM) | C (MM) | D (MM) | F |
|---|---|---|---|---|---|
| F00611B00 | - | 171 | 270 | - | - |
| F00611B10 | - | 171 | 270 | - | - |
| F00611B60 | - | 171 | 270 | - | - |
| F00611030 | 110 | - | - | 75 | 1" BSP M |
| F00611040 | 155 | - | - | 75 | 1" BSP M |
| F00611060 | 110 | - | - | 75 | 1" BSP M |
| F15744000 | - | 171 | - | - | 1" BSP F |

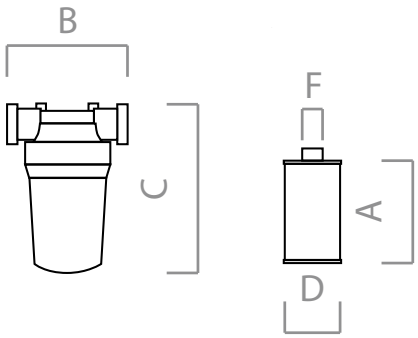


## MATERIALS

- FILTER: ABSORBENT FILTERING PAPER (NO STRAINER VERSION)

## TECHNICAL DATA

| CODE | DESCRIPTION | FLUIDS TYPE | FLOW RATE | | INLET / OUTLET | WATER ABSORBING | EFFICIENCY | MICRO | PRESSURE |
|---|---|---|---|---|---|---|---|---|---|
| | | | L/MIN | GPM | BSP | | ß | µ m | BAR |
| **CLEAR CAPTOR** | | | | | | | | | |
| F00611B00 | CLEAR CAPTOR FILTER | B D | 100 | 26,4 | 1" | NO | 2 | 5 | 5 |
| F00611B10 | CLEAR CAPTOR WATER FILTER | B D | 70 | 18,5 | 1" | YES | 200 | 30 | 5 |
| F00611B60 | CLEAR CAPTOR STRAINER | B D | 100 | 26,4 | 1" | NO | 2 | 120 | 5 |
| **CLEAR CAPTOR CARTRIDGE** | | | | | | | | | |
| F00611030 | CLEAR CAPTOR CARTRIDGE | B D | 100 | 26,4 | - | NO | 2 | 5 | - |
| F00611040 | CLEAR CAPTOR WATER FILTER CARTRIDGE | B D | 70 | 18,5 | - | YES | 200 | 30 | - |
| F00611060 | CLEAR CAPTOR STRAINER CARTRIDGE | B D | 100 | 26,4 | - | NO | 2 | 120 | - |
| **CLEAR CAPTOR FILTER HEAD** | | | | | | | | | |
| F15744000 | FILTER HEAD CLEAR CAPTOR | B D | - | - | 1" | NO | - | - | - |

# FUEL & BIOFUEL

## FEATURES

- REPLACEABLE CARTRIDGE
- HIGH EFFICIENCY
- SMALL SIZE

Among its range of filters, PIUSI has developed the FUEL&BIOFUEL FILTER: cartridge and water absorbing filters that prevent fluid contamination thanks to their improved filtration capacity up to 30µ.

BIO-FUEL FILTER

OIL AND FUEL FILTER

LINE FILTER 1-1

### PERFORMANCE

| | |
|---|---|
| UP TO 100 L/MIN | 3,5 BAR MAX |
| FLOW RATE | OPERATING PRESSURE |
| FILTERING CAPACITY 10µ/200ß | FILTERING CAPACITY 5-10µ/2ß |
| BIOFUEL | FUEL |

### PACKAGING

| CODE | WEIGHT | PACKAGING | | |
|---|---|---|---|---|
| | KG | DIMENSIONS MM | CARTRIDGE PSC / BOX | FILTER HEAD PCS/BOX |
| **FILTRI BIOFUEL** | | | | |
| F00611C00 | 2 | 390X285X140 | 2 | 1 |
| F00611C10 | 1,9 | 390X285X140 | 1 | 1 |
| **CARTUCCE PER FILTRI BIOFUEL** | | | | |
| F14861000 | 0,9 | - | 1 | - |
| F1486200A | 1,5 | 280X160X140 | 1 | - |
| **FILTRI FUEL** | | | | |
| F0777200A | 1 | 200X120X140 | 1 | 1 |
| F0914900B | 2,6 | 390X285X140 | 1 | 1 |
| **CARTUCCE PER FILTRI FUEL** | | | | |
| F0935900A | 1,2 | - | 1 | - |
| F00611000 | 0,5 | - | 1 | - |
| F16483010 | 9,2 | 500X300X200 | 15 | - |
| **TESTATE FILTRI** | | | | |
| F14528000 | 0,3 | 360X360X280 | - | 1 |
| F14640000 | 0,3 | - | - | 1 |
| F15743000 | 0,8 | 200X120X140 | - | 1 |
| **INLINE FILTER** | | | | |
| F08950000 | 0,6 | - | - | - |

ANY BIODIESEL | AIR | ANTIFREEZE | AdBlue® | BIODIESEL | DIESEL | FOOD | GASOLINE | GREASE | KEROSENE | OIL | WATER | WINDSCREEN

## DIMENSIONS

| | A (MM) | B (MM) | C (MM) | D (MM) | F |
|---|---|---|---|---|---|
| **FILTER FOR BIOFUEL** | | | | | |
| F00611C00 | - | 100 | 275 | 95 | - |
| F00611C10 | - | 171 | 340 | 130 | - |
| F14861000 | 220 | - | - | 95 | 1" - 12 UNF |
| F1486200A | 275 | - | - | 130 | 1" 1/2 - 16 UNF |
| F14640000 | - | 100 | - | - | 1" - 12 UNF |
| F15743000 | - | 171 | - | - | 1" 1/2 - 16 UNF<br>1" 1/4 BSP |
| **FILTER FOR FUEL AND OIL** | | | | | |
| F0777200A | - | 100 | 160 | 98 | - |
| F0914900B | - | 171 | 236 | 132 | - |
| F00611000 | 145 | - | - | 98 | 3/4" BSP |
| F0935900A | 180 | - | - | 132 | 1" 1/4 BSP |
| F14528000 | - | 100 | - | - | 3/4" BSP |
| F15743000 | - | 171 | - | - | 1" 1/2 - 16 UNF<br>1" 1/4 BSP |
| F16483010 | 139 | - | - | 93 | 3/4" BSP |
| **LINE FILTER** | | | | | |
| F08950000 | - | - | - | - | - |

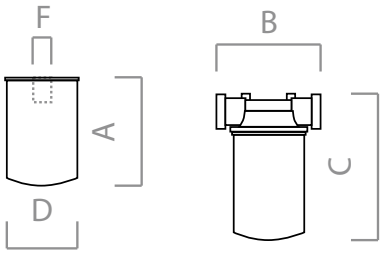


BIO-FUEL / OIL AND FUEL FILTERS

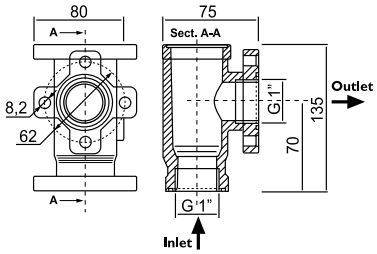


LINE FILTER 1-1

*Dimensions expressed in millimeters*

## IN THE BOX

- FILTER CARTRIDGE
- METALLIC HEAD (WHERE PROVIDED)
- ADDITIONAL CARTRIDGE

## DETAILS

FILTER HEAD

REPLACEABLE CARTRIDGE

INLINE FILTER

INLINE FILTER

## MATERIALS

- FILTER: ABSORBENT FILTERING PAPER (NO INLINE FILTER)

## TECHNICAL DATA

| CODE | DESCRIPTION | FLUIDS TYPE | FLOW RATE L/MIN | FLOW RATE GPM | INLET / OUTLET BSP | WATER ABSORBING | EFFICIENCY ß | MICRO µ m | PRESSURE BAR |
|---|---|---|---|---|---|---|---|---|---|
| **FILTRI BIOFUEL** | | | | | | | | | |
| F00611C00 | BIO-FUEL FILTER 70 L/MIN 1"X1" | B | 70 | 18,5 | 1" | YES | 200 | 10 | 3,5 |
| F00611C10 | BIO-FUEL FILTER 100 L/MIN 1"X1" | B | 100 | 26,4 | 1" | YES | 200 | 10 | 3,5 |
| **CARTUCCE PER FILTRI BIOFUEL** | | | | | | | | | |
| F14861000 | CARTRIDGE 70 L/MIN BIO-FUEL | B | 70 | 19,5 | 1" - 12 UNF | YES | 200 | 10 | FUEL |
| F1486200A | CARTRIDGE BIODIESEL WAT. SEP 100 L/M | B D | 100 | 26,4 | 1 1/1" - 16 UNF | YES | 200 | 10 | 3,4 |
| **FILTRI FUEL** | | | | | | | | | |
| F0777200A | 60 L/MIN FILTER WITH HEAD | B D O | 60 | 15,9 | 1" | NO | 2 | 10 | 12 |
| F0914900B | 100 L/MIN FILTER WITH HEAD | B D O | 100 | 26,4 | 1" | NO | 2 | 10 | 12 |
| **CARTUCCE PER FILTRI FUEL** | | | | | | | | | |
| F0935900A | CARTRIDGE 100 L/MIN | B D O | 100 | 26,4 | - | NO | 2 | 10 | 12 |
| F00611000 | FUEL&OIL FILTER CARTRIGE 10 MICRON 3/4 | D O | 60 | 16 | 3/4 BSP | YES | 2 | 10 | 12 |
| F16483010 | CARTUCCIA 10 MIC FILTRO 3/4" IN PIUSI_BOX | D O | 60 | 15,9 | 3/4" BSP | NO | 2 | 10 | 12 |
| **TESTATE FILTRI** | | | | | | | | | |
| F14528000 | FILTER HEAD 3/4 BSP 60 L/MIN | - | - | - | 1" | - | - | - | - |
| F14640000 | FILTER HEAD 1"INX1"IN UNF | - | - | - | 1" | - | - | - | - |
| F15743000 | FILTER HEAD 70/100LT | - | - | - | 1" | - | - | - | - |
| **INLINE FILTER** | | | | | | | | | |
| F08950000 | LINE FILTER | - | - | - | 1" | - | - | 350 | - |

# FOOT VALVE

## FEATURES

- HEAVY DUTY
- STURDY STRUCTURE
- LOW PRESSURE DROP
- ANTI-SHOCK MATERIALS

The FOOT VALVE designed and engineered by PIUSI is a new concept of valve for fuel suction hoses on machinery. It is fitted with a mesh filter for diesel fuel residues, anti-shock materials to avoid damage caused by dropping and, thus, a low dropping pressure. The quick locking/unlocking and the clear indications of opening and closing complete its main features.

### PERFORMANCE

| 1200µ | 1”-3/4” BSP |
|---|---|
| FILTERING CAPACITY | INLET |

FOOT VALVE WITH FILTER

FOOT VALVE - F1239904C

### PACKAGING

| CODE | WEIGHT | | PACKAGING | | |
|---|---|---|---|---|---|
| | KG | LBS | DIMENSIONS MM | INCH | PCS/BOX |
| F00609000 | 2,5 | 5,3 | 180X180X170 | 7,1X7,1X6,7 | 10 |
| F00612000 | 0,2 | 0,44 | - | - | 1 |
| F21476000 | 0,35 | 0,77 | - | - | 1 |
| F15749000 | 1,35 | 3 | 215X147X116 | 8,5X5,8X4,6 | 12 |
| F07978000 | 6,7 | 14,8 | 180X180X170 | 7,1X7,1X6,7 | 25 |
| F08153000 | 0,15 | 0,33 | - | - | 1 |
| F07746000 | 0,2 | 0,44 | - | - | 1 |
| F1239900C | 0,5 | 1,1 | 360X190X290 | 14X7,4X11,4 | 1 |
| F1239904C | 0,5 | 1,1 | 360X190X260 | 14X7,4X10,2 | 1 |
| F09170000 | 6,5 | 14,3 | 180X180X170 | 7,1X7,1X6,7 | 25 |

ANY BIODIESEL | AIR | ANTIFREEZE | AdBlue® | BIODIESEL | DIESEL | FOOD | GASOLINE | GREASE | KEROSENE | OIL | WATER | WINDSCREEN

**F00609000**
Ø25

**F00612000**
Ø19

**F21476000**
1"-1/2 BSP

**F07979000**
1"BSP

**F10571000**
3/4"BSP

**F0775700A** (20pz)
1" x Ø20
**F0776400A** (20pz)
1" x Ø25

**F15749000**

1" BSP

1"BSP

**F07978000**
**F09170000**
(SAFETY VALVE)

1" BSP

1"BSP

**F08153000**

3/4" BSP

3/4"BSP

## TECHNICAL DATA

| CODE | DESCRIPTION | FLUIDS TYPE | SAFETY VALVE | | | | | MICRO µm |
|---|---|---|---|---|---|---|---|---|
| F00609000 | FOOT VALVE CON FILTRO 1" BSP | D G O | YES | YES | - | YES | YES | 1200 µm |
| F00612000 | FOOT VALVE CON FILTRO 3/4" BSP | D G O | YES | YES | - | YES | YES | 1200 µm |
| F21476000 | FOOT VALVE W/FILTER 1"1/2 BSP | D O | | - | YES | YES | - | 1200 µm |
| F15749000 | 1" WITH BUILT-IN SAFETY VALVE | D G O | YES | YES | - | - | - | - |
| F07978000 | FOOT VALVE WO/FILTER 1" BSP | D O | - | - | YES | - | - | - |
| F08153000 | FOOT VALVE WO/FILTER 3/4" BSP | D O | - | - | YES | - | - | - |
| F07746000 | FOOT VALVE W/FILTER 1" BSP BRASS | D O | - | - | YES | YES | - | - |
| F1239900C | FOOT VALVE HF F 3/4 BSP | D O | - | - | YES | - | - | - |
| F1239904C | FOOT VALVE HF +PORTAG -X D.20,2 | D O | - | - | YES | - | - | - |
| F09170000 | HIGH PRESSURE VALVE 1" BSP | D O | YES | - | YES | - | - | - |

# TANK MONITORING

# OCIO

## FEATURES

- LOW/HIGH LEVEL ALARMS
- FLUID MEASURES INDICATION
- BUILT-IN DISPLAY

OCIO is PIUSI's tank level indicator suitable for any kind of fluid storaged in tanks up to a 4 mt depth. It gives a real time indication of the fluid quantity inside the tank. It is easy to calibrate and has two alarms that can be adjusted at a specific high and low level for high and low levels.

### PERFORMANCE

| | |
|---|---|
| UP TO 4MT HEIGHT — TANK | ± 1% FULL SCALE — ACCURACY |
| UP TO 50 MT LENGTH — PROBE TUBE | UP TO 30 CST — VISCOSITY |

OCIO

10 METERS HOSE

BRASS PROBE

### PACKAGING

| CODE | WEIGHT | | PACKAGING | | |
|---|---|---|---|---|---|
| | KG | LBS | MM | INCH | PCS/BOX |
| F0075510D | 2,2 | 4,8 | 300X410X100 | 11,8X16,1X3,9 | 1 |
| F0075516O | 2,2 | 4,8 | 300X410X100 | 11,8X16,1X3,9 | 1 |

ANY BIODIESEL | AIR | ANTIFREEZE | AdBlue® | BIODIESEL | DIESEL | FOOD | GASOLINE | GREASE | KEROSENE | OIL | WATER | WINDSCREEN

## FUNCTIONING

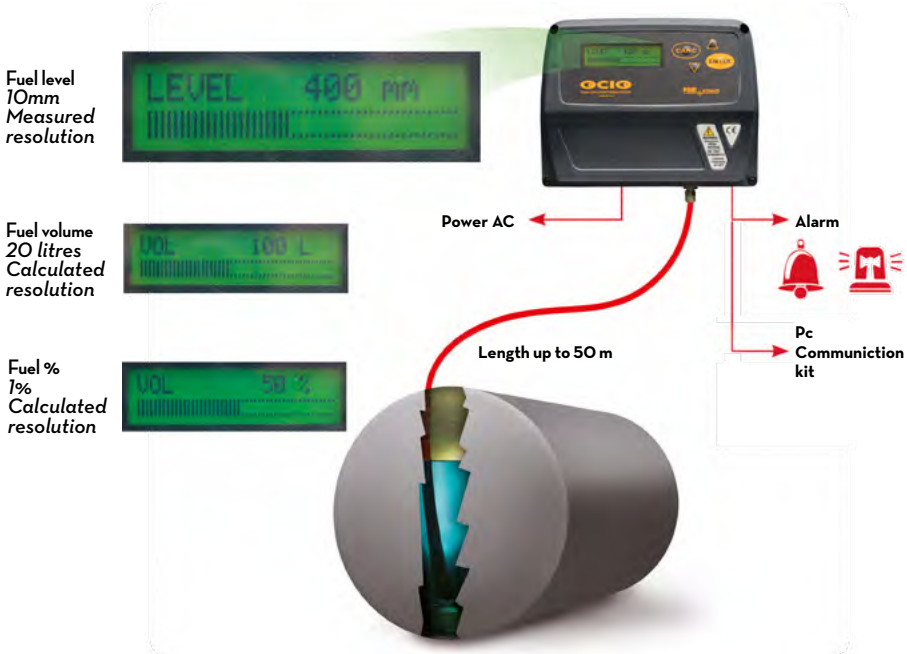


## IN THE BOX

- OCIO UNIT
- PROBE
- 10 MT TUBE
- INSTRUCTION MANUAL

## DETAILS

BRASS PROBE

2 ALARMS

## DIMENSIONS

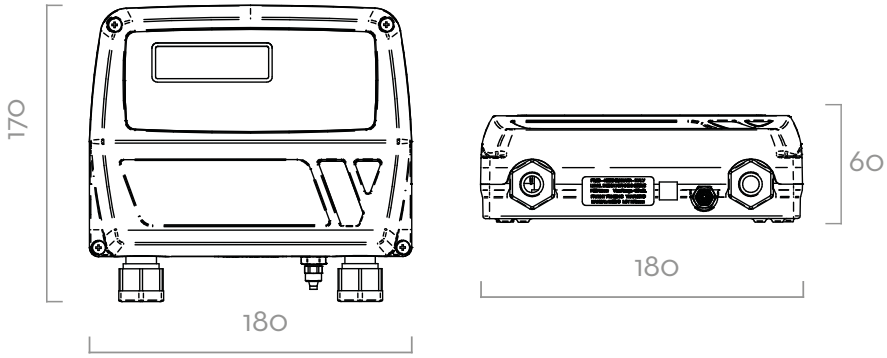


## MATERIALS

- PROBE: BRASS
- TUBE: RILSAN (POLYAMIDE)

*Dimensions expressed in millimeters*

## TECHNICAL DATA

| CODE | DESCRIPTION | FLUIDS TYPE | VISCOSITY | VOLTAGE | | RS EXIT |
|---|---|---|---|---|---|---|
| | | | cSt | AC V./HZ | POWER WATT | |
| FO075510D | LEVEL INDICATOR OCIO LV / RS OUTPUT | A B D O W | UP TO 30 | 230/50 | 20 | AVAILABLE |
| FO075516O | LEVEL INDICATOR OCIO LV / 4/20 mA OUTPUT | A B D O W | UP TO 30 | 230/50 | 20 | AVAILABLE |

# OCIO 2.0

## FEATURES

- LOW/HIGH LEVEL ALARMS
- FLUID QUANTITY INDICATION
- FLUID HEIGHT INDICATION
- BUILT-IN DISPLAY
- COMPATIBLE WITH SSM 2.0, MCO 2.0 AND B.SMART

With its brand-new design, OCIO 2.0 by PIUSI is the upgraded version of the tank level indicator compatible with SSM 2.0, MCO 2.0 and B.Smart systems.
It requires a LAN/Wi-Fi connection to communicate with the software.
It maintains all the performances of the standard OCIO.
Thanks to its interchangeable probe, OCIO 2.0 is compatible with several fluids.

### PERFORMANCE

| | |
|---|---|
| UP TO **4MT** HEIGHT<br>TANK | **± 1%** FULL SCALE<br>ACCURACY |
| UP TO **50 MT** LENGTH<br>PROBE TUBE | UP TO **30 CST**<br>VISCOSITY |

OCIO 2.0

10 METERS HOSE

BRASS PROBE

### PACKAGING

| CODE | WEIGHT | | PACKAGING | | |
|---|---|---|---|---|---|
| | KG | LBS | MM | INCH | PCS/BOX |
| F00755260 | 2,2 | 4,8 | 300X410X100 | 11,8X16,1X3,9 | 1 |
| F00755220 | 2,2 | 4,8 | 300X410X100 | 11,8X16,1X3,9 | 1 |
| F0075521A | 2,2 | 4,8 | 300X410X100 | 11,8X16,1X3,9 | 1 |

ANY BIODIESEL | AIR | ANTIFREEZE | AdBlue® | BIODIESEL | DIESEL | FOOD | GASOLINE | GREASE | KEROSENE | OIL | WATER | WINDSCREEN

## CONNECTION

## IN THE BOX

- OCIO 2.0
- PROBE
- 10 MT TUBE
- INSTRUCTION MANUAL

## DETAILS

BRASS PROBE

2 ALARMS

INTEGRATED LAN ADAPTER

SSM 2.0 SELF SERVICE MANAGEMENT
SSM 2.0 SOFTWARE

## FUNCTIONING

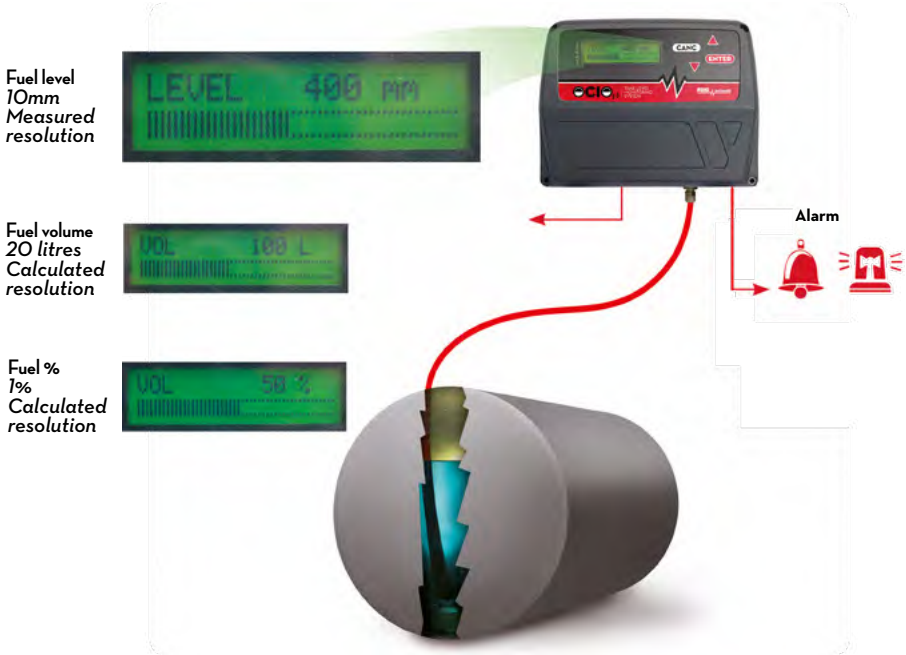


## MATERIALS

- PROBE: BRASS
- TUBE: TECHNOPOLYMER

## TECHNICAL DATA

| CODE | DESCRIPTION | FLUIDS TYPE | VISCOSITY | VOLTAGE | |
|---|---|---|---|---|---|
| | | | cSt | AC V./HZ | POWER WATT |
| F0075526O | LEVEL INDICATOR OCIO LAN 2.0 | A B D O W | UP TO 30 | 230-50/60 | 20 |
| F0075522O | LEVEL INDICATOR OCIO RS485 2.0 | A B D O W | UP TO 30 | 230-50/60 | 20 |
| F0075521A | LEVEL INDICATOR OCIO WIFI 2.0 | A B D O W | UP TO 30 | 230-50/60 | 20 |

# TANK MONITORING ACCESSORIES

## TANK LEVEL INDICATORS

| OCIO | CODE | DESCRIPTION | |
|---|---|---|---|
| | F1391300A | KIT 50 MT OCIO PIPE D.6X4 | F1391300A |

MC
PIUSI
STOP
CANCEL
ENTER
CANC
ENTER
CIO 2.0
TANK LEVEL MONITORING SYSTEM
PIUSI
PW WI-FI 2.0

# HOSE REEL

# DIESEL HOSE REEL

## FEATURES

- STURDY STRUCTURE
- HAND PROTECTION
- CORROSION RESISTANCE
- REDUCED PRESSURE LOSS
- HEAVY DUTY CONDITIONS

PIUSI automatic DIESEL HOSE REELS for diesel have been designed to ensure high efficiency. The sturdy structure can guarantee the best performance also in heavy duty conditions.

### PERFORMANCE

| 15 BAR | MAX 20 MT |
|---|---|
| MAX OPERATING PRESSURE | LENGTH HOSE BOUND |

AUTOMATIC HOSE REEL WITH HOSE

HOSE DIESEL HOSE REEL FOR 12M HOSE VERSION

### PACKAGING

| CODE | WEIGHT | | PACKAGING | | | N. BOXES / EUROPALLET | |
|---|---|---|---|---|---|---|---|
| | KG | LBS | MM | INCH | PCS/BOX | ✈ | 🚢 |
| **WITHOUT HOSE** | | | | | | | |
| F0075000A | 19 | 41,9 | 550X260X540 | - | 1 | 12 | 20 |
| F0075001A | 18 | 39,7 | 550X260X540 | - | 1 | 12 | 20 |
| F0075008A | 15 | 33,1 | 550X260X540 | - | 1 | 12 | 20 |
| F0075025A | 22,3 | 49,1 | 560X350X560 | - | 1 | 12 | 20 |
| F0075018B | 21 | 46 | 550X260X540 | - | 1 | 12 | 20 |
| **WITH HOSE** | | | | | | | |
| F0075002B | 26 | 57,3 | 550X260X540 | - | 1 | 12 | 20 |
| F0075003B | 25 | 55,1 | 550X260X540 | - | 1 | 12 | 20 |
| F0075023B | 25 | 55,1 | 550X260X540 | - | 1 | 12 | 20 |
| F0075004B | 22 | 49,5 | 550X260X540 | - | 1 | 12 | 20 |
| F0075012B | 22 | 49,5 | 550X260X540 | - | 1 | 12 | 20 |
| F0075009B | 18 | 39,6 | 550X260X540 | - | 1 | 12 | 20 |
| F0075010B | 27 | 59,5 | 550X260X540 | - | 1 | 12 | 20 |
| F0075019B | 27 | 59,5 | 560X350X560 | - | 1 | 8 | 12 |
| F0075026B | 27 | 59,5 | 560X350X560 | - | 1 | 8 | 12 |

## INSTALLATION&DIMENSIONS

Different ways to install PIUSI's hose reels: they can be easily placed wherever you need them without any problem about functionality and safety. PIUSI's products are without a doubt designed to support your work in any condition.

## IN THE BOX

- REEL
- WALL MOUNT BRACKET
- INSTRUCTION MANUAL

### ROOF INSTALLATION

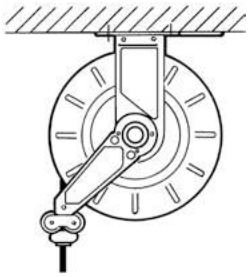

### WALL INSTALLATION

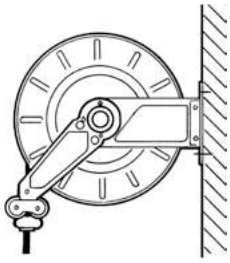

### GROUND INSTALLATION

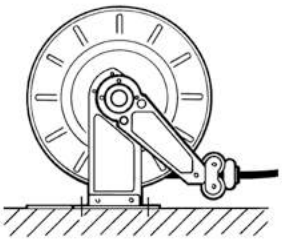

| MODEL | HOSE REEL XL | HOSE REEL BIG | HOSE REEL SMALL |
|---|---|---|---|
| A | 512 | 495 | 475 |
| B | 470 | 460 | 460 |
| C | 227 | 152 | 102 |
| D | 200 | 200 | 150 |
| E | 322 | 246 | 196 |
| F | 160 | 150 | 150 |
| G | 260 | 200 | 150 |
| H | 12 | 12 | 12 |
| L | 382 | 306 | 256 |

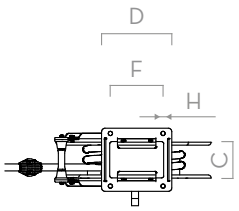


### HOSE REEL FRONT / SIDE

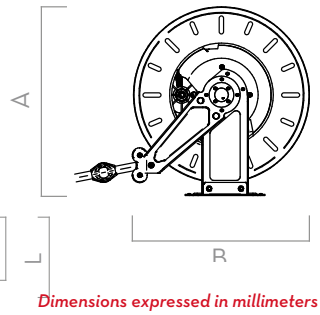


*Dimensions expressed in millimeters*

## DETAILS

4 ROLLS HOSE GUIDE

AUTOMATIC HOSE REELS

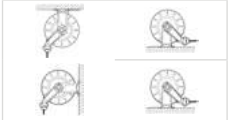

DIFFERENT INSTALLATIONS

STURDY DESIGN

## MATERIALS

- BODY: CAST IRON
- HUB: SYNTHERED STEEL
- TUBE: RUBBER

## TECHNICAL DATA

| CODE | DESCRIPTION | FLUIDS TYPE | HOSE | MAX OPERATING PRESSURE | PRESSURE DROP | INLET | OUTLET | HOSE MAX LENGTH BOUND | HOSE LENGTH |
|---|---|---|---|---|---|---|---|---|---|
| | | | BSP | BAR | TYPE | WITH SWIVEL BSP | HOSETAIL BSP | METERS | METER |
| **WITHOUT HOSE** | | | | | | | | | |
| F0075000A | HOSE REEL 3/4" BIG | D | 3/4" | 10 | 0,15 @ 60 L/MIN | 1" MALE | 3/4" | 14 | - |
| F0075001A | HOSE REEL 1" BIG | D | 1" | 10 | 0,2 @ 80 L/MIN | 1" MALE | 1" | 10 | - |
| F0075008A | HOSE REEL 3/4" SMALL | D | 3/4" | 10 | 0,15 @ 60 L/MIN | 1" MALE | 3/4" | 10 | - |
| F0075025A | HOSE REEL 1" XL HEAVY DUTY (STEEL HUB) | D | 1" | 15 | 0,5 @ 80 L/MIN | 1" FEMALE | 1" MALE | 15 | - |
| F0075018B | HOSE REEL NAKED XL 15M | D | 1" | 10 | 0,2 @ 80 L/MIN | 1" FEMALE | 1" MALE | 15 | - |
| **WITH HOSE** | | | | | | | | | |
| F0075002B | HOSE REEL 8X1" BIG | D | 1" | 10 | 0,6 @ 80 L/MIN | 1" FEMALE | 1" MALE | - | 8 |
| F0075003B | HOSE REEL 10X1" BIG | D | 1" | 10 | 0,7 @ 80 L/MIN | 1" FEMALE | 1" MALE | - | 10 |
| F0075023B | HOSE REEL 10X1" BIG HEAVY DUTY (STEEL HUB) | D | 1" | 10 | 0,7 @ 80 L/MIN | 1" FEMALE | 1" MALE | - | 10 |
| F0075004B | HOSE REEL 10X3/4" BIG | D | 3/4" | 10 | 0,7 @ 60 L/MIN | 1" FEMALE | 1" MALE | - | 10 |
| F0075012B | HOSE REEL 10X3/4" BIG | D | 3/4" | 10 | 0,7 @ 60 L/MIN | 1" FEMALE | 3/4" MALE | - | 10 |
| F0075009B | HOSE REEL 8X3/4" SMALL | D | 3/4" | 10 | 0,6 @ 60 L/MIN | 1" FEMALE | 1" MALE | - | 8 |
| F0075010B | HOSE REEL 14X3/4" BIG | D | 3/4" | 10 | 0,6 @ 60 L/MIN | 1" FEMALE | 1" MALE | - | 14 |
| F0075019B | HOSE REEL 15X1" XL | D | 1" | 15 | 1 @ 80 L/MIN | 1" FEMALE | 1" MALE | - | 15 |
| F0075026B | HOSE REEL 15X1" XL HEAVY DUTY (STEEL HUB) | D | 1" | 15 | 0,8 @ 80 L/MIN | 1" FEMALE | 1" MALE | - | 15 |

MINIMUM RADIUS OF CURVATURE FOR 3/4 HOSE SIZES "AND 1" OF AT LEAST 130MM; ELECTRICALLY, THE HOSE MUST BE CONDUCTOR R<1 MOhm/m

# HOSE REELS ACCESSORIES

## OPEN HOSE REEL

| DIESEL HOSE REEL | CODE | DESCRIPTION |
|---|---|---|
| | F1627900A | SMALL HOSE REEL FIXED BASE |
| | F1629800A | SMALL HOSE REEL ROTATING SUPPORT |
| | F16367000 | BIG HOSE REEL ROTATING SUPPORT |
| | F1731600A | BIG HOSE REEL FIXED BASE |
| | F1731700A | DIESEL HOSE Ø25 L=1M CRIMPED 1"X1" |

F1629800A
F1731600A

F1627900A
F1731700A

F16367000

PIUSI
Cookers
SPACE

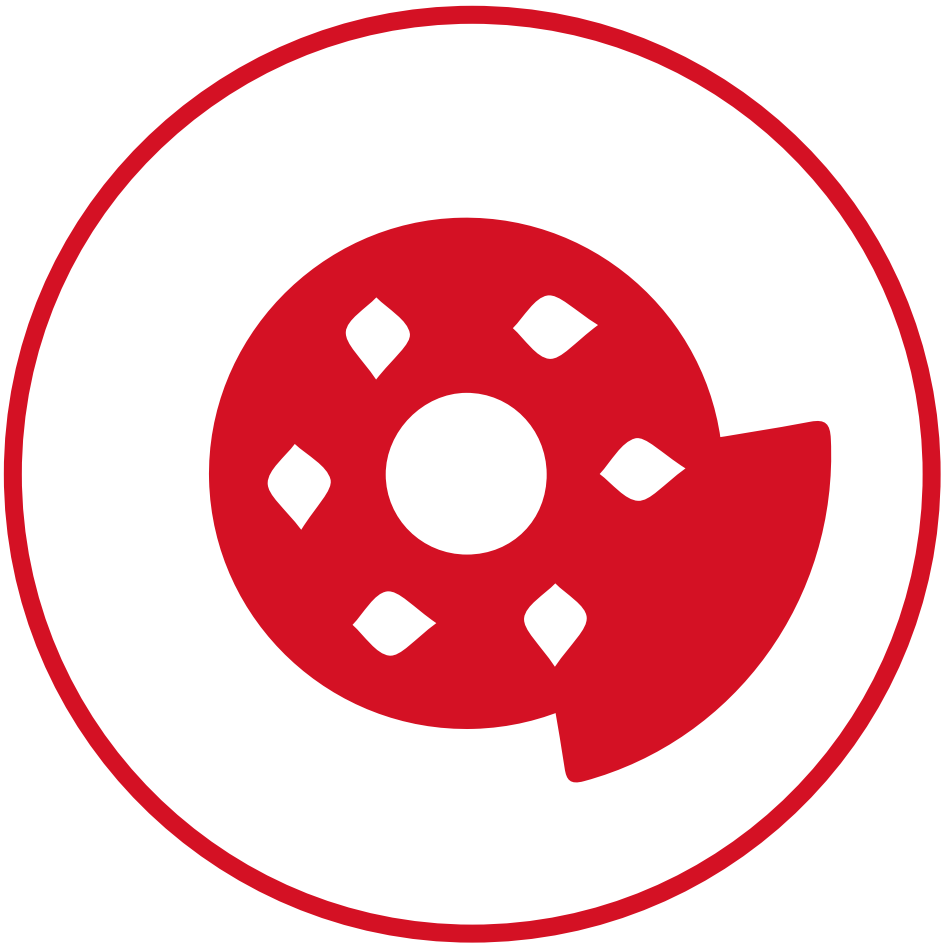

# ACCESSORIES

# ACCESS 85

## FEATURES

- ACCESS CONTROL
- SUITABLE FOR ANY PUMP AND SYSTEM
- READY TO USE
- MULTI USERS
- LEVEL CONTROL INPUT

The PIUSI ACCESS 85 is an electronic control unit that allows users to control the withdrawal of fuel from a tank by several users. It is able to control: pump start and stop, user access by means of electronic key, the position of the dispenser gun with relevant go ahead. It also features a built-in emergency button to stop all operations.

### PERFORMANCE

| UP TO 85 | AC CONTINUOUS DUTY |
|---|---|
| USERS | POWER |

ACCESS 85

### PACKAGING

| CODE | WEIGHT | | PACKAGING | | |
|---|---|---|---|---|---|
| | KG | LBS | MM | INCH | PCS/BOX |
| F00702000 | 0,7 | 1,5 | 120X140X200 | 4,7X5,5X7,9 | 1 |

ANY BIODIESEL AIR ANTIFREEZE AdBlue® BIODIESEL DIESEL FOOD GASOLINE GREASE KEROSENE OIL WATER WINDSCREEN

## FUNCTIONING

PUMP CONTROL

NOZZLE SWITCH CONTROL

TANK ALARM CONTROL

## IN THE BOX

- ACCESS 85 UNIT
- INSTRUCTION MANUAL

## DETAILS

DRIVER KEY (OPTIONAL)

EMERGENCY BUTTON

## TECHNICAL DATA

| CODE | DESCRIPTION | FLUIDS TYPE | USERS | USERS KEY | VOLTAGE | | |
|---|---|---|---|---|---|---|---|
| | | | | | AC V./HZ | POWER WATT | AMP. MAX. |
| F00702000 | ACCESS 85 | D G K O | 85 | NO | 230 | 3,5 | 6 |

# CONNECTORS

## FEATURES

- *STURDY STRUCTURE*
- *READY TO USE*
- *SEVERAL SOLUTIONS AVAILABLE*

The range of fuel products is completed with a wide array of accessories for connecting products to allow the best performance. Starting form the 2" connectors and quick coupling.

### PERFORMANCE

| 2" | 2" |
|---|---|
| DRUM CONNECTOR | QUICK COUPLING |

*2" DRUM CONNECTOR WITHOUT INTEGRATED VALVE*

*2" DRUM CONNECTOR WITH FLANGED AND INTEGRATED VALVE*

*2" DRUM CONNECTOR WITH INTEGRATED VALVE*

*2" QUICK COUPLING*

### PACKAGING

| CODE | PACKAGING | | | |
|---|---|---|---|---|
| | KG | MM | INCH | PCS/BOX |
| *2" CONNECTOR* | | | | |
| F17163000 | 0,6 | 133X98X85 | | 1 |
| F17190000 | 0,6 | 133X98X85 | | 1 |
| F17163010 | 0,8 | 133X98X85 | | 1 |
| *2" QUICK COUPLING* | | | | |
| R09160000 | 0,9 | 133X98X85 | | 1 |
| F0893000A | 0,9 | 133X98X85 | | 1 |
| *EXTENSIBLE PIPE* | | | | |
| F08934000 | 0,2 | 680X40X40 | | |
| F08934010 | 3,9 | 830X160X100 | | |
| F08934020 | 1,9 | 680X40X40 | | 1 |

## DIMENSIONS

### COMPLETE KIT EXTENSIBLE SUCTION PIPE (1800MM)

CODE:
**F008934010**

WEIGHT:
**3,9 KG**

PACKAGING:
**820X150X100**

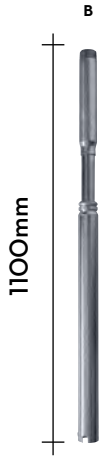


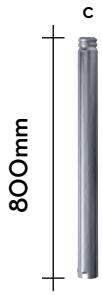


**A:**
DRUM CONNECTOR FLANGED AND VALVE

**B:**
EXTENSIBLE STEEL PIPE 1" BSP

**C:**
STEEL PIPE 1" BSP

## IN THE BOX

- CONNECTOR
- INSTRUCTION MANUAL

## DETAILS

MESH STRAINER

INTEGRATED VALVE

## DIMENSIONS

### EXTENSIBLE PIPE PLASTIC MADE

### EXTENSIBLE STEEL PIPE 1" BSP

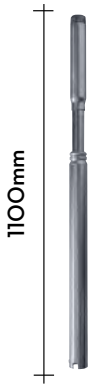


### 2" CONNECTOR

### 2" QUICK CONNECTOR

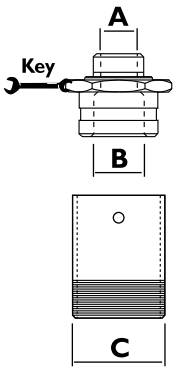


*Dimensions expressed in millimeters*

## TECHNICAL DATA

| CODE | DESCRIPTION | FLUIDS TYPE | INTEGRATED VALVE | FILTER | INLET BSP | OUTLET BSP | THREADED FLANGE BSP | A BSP | B BSP | C BSP | KEY |
|---|---|---|---|---|---|---|---|---|---|---|---|
| **2" CONNECTOR** | | | | | | | | | | | |
| F17163000 | DRUM CONNECTOR WITH INTEGRATED VALVE | D G K O | YES | YES | 2" | - | NO | 1" | 1" | 2" | - |
| F17190000 | DRUM CONNECTOR WITHOUT INTEGRATED VALVE | D G K O | NO | YES | 2" | - | NO | 1" | 1" | 2" | - |
| F17163010 | DRUM CONNECTOR WITH FLANGED AND INTEGRATED VALVE | D G K O | YES | YES | 2" | 1" | YES | 1" | 1" | 2" | - |
| **2" QUICK COUPLING** | | | | | | | | | | | |
| R09160000 | QUICK COUPLING 3/4" | D O | NO | NO | 3/4" | 1" | NO | M 3/4" | F 1" | M 2" | 60 |
| F0893000A | QUICK COUPLING 1" | D O | NO | NO | 1" | 1" | NO | M 1" | F 1" | M 2" | 60 |
| **EXTENSIBLE PIPE** | | | | | | | | | | | |
| F08934000 | EXTENSIBLE SUCTION PIPE 1" 940MM PLAST. | D G K O | - | - | 1" | 1" | - | - | - | - | - |
| F08934010 | KIT EXTENSIBLE SUCTION PIPE 1" 1800MM | D G K O | YES | YES | 2" | 1" | YES | 1" | 1" | 2" | - |
| F08934020 | EXTENSIBLE SUCTION PIPE 1" 1100MM STEEL | D G K O | - | - | 1" | 1" | - | - | - | - | - |

# COUPLING & FITTINGS

## FEATURES

- EASY TO USE
- VERSATILITY AND SEVERAL SHAPES

PIUSI COUPLING & FITTINGS are engineered to fit every application context represen-ting the perfect solution to connect the fuel equipment.

## TECHNICAL DATA

## ELBOWS

| CODE | DESCRIPTION | INLET / OUTLET A | INLET / OUTLET B | INLET / OUTLET C | KEY 1 | KEY 2 | Q.TY |
|---|---|---|---|---|---|---|---|
| F07806000 | ELBOW F 3/4" BSP / F 3/4" BSP | F 3/4"BSP | F 3/4"BSP | - | - | - | - |
| F07805000 | ELBOW M 3/4" BSP / F 3/4" BSP | M 3/4"BSP | F 3/4"BSP | - | - | - | - |
| F08609000 | ELBOW F 1" BSP / F 1" BSP - BRASS | F 1" BSP | F 1" BSP | - | - | - | - |
| F07988000 | ELBOW M 1" BSP / F 1" BSP - BRASS | M 1" BSP | F 1" BSP | - | - | - | - |
| F14567000 | ELBOW ROTATING CONNECTOR 90° 1" M/F | M 1" BSP | F 1" BSP | - | - | - | - |

ROTATING ELBOWS

ELBOWS

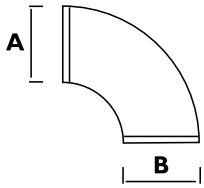


## HOSE TAILS

| | | | | | | | |
|---|---|---|---|---|---|---|---|
| F0826700A | HOSETAIL 1/2" X D.20 + OR | 1/2" BSP | 19 MM | - | 24 | - | 1 |
| F0643700A | HOSETAIL 3/4" X D.20 + OR (20 PCS) | 3/4" BSP | 19 MM | - | 32 | - | 20 |
| F0776800B | HOSETAIL 3/4" X D.25 + OR (20 PCS) | 3/4" BSP | 25 MM | - | 32 | - | 20 |
| F0775700A | HOSETAIL 1" X D.20 + OR (20 PCS) | 1" BSP | 19 MM | - | 37 | - | 20 |
| F0776400A | HOSETAIL 1" X D.25 + OR (20 PCS) | 1" BSP | 25 MM | - | 37 | - | 20 |

HOSE TAILS

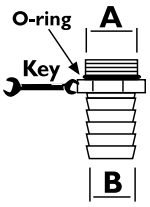


## HQC

| | | KG. | MM. | PCS/BOX |
|---|---|---|---|---|
| F00636000 | HQC - HOSE QUICK COUPLING 1" BSP | 0,46 | 80X80X75 | 1 |

HQC

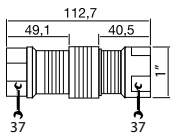


## SEALANT PASTE

| | | GR. | ML. |
|---|---|---|---|
| F08173000 | ADEHESIVE PASTE LOXEAL 18-10 - LIGHT REMOVABLE | 130 | - |
| F10767000 | THREAD SEALANT BLUE LOXEAL 55.03 - MEDIUM REMOVABLE | | 250 |
| F12278000 | THREAD SEALANT GREEN LOXEAL 85.21 - HEAVY NON REMOVABLE | | 250 |

SEALANT PASTE

ANY BIODIESEL | AIR | ANTIFREEZE | AdBlue® | BIODIESEL | DIESEL | FOOD | GASOLINE | GREASE | KEROSENE | OIL | WATER | WINDSCREEN

## TECHNICAL DATA

| CODE | DESCRIPTION | INLET / OUTLET | | | KEY | | Q.TY |
|---|---|---|---|---|---|---|---|
| | | A | B | C | 1 | 2 | |

## SLEEVE

| | | | | | | | |
|---|---|---|---|---|---|---|---|
| F08137000 | SLEEVE HOSE DIAM. 20 | 28 MM | 20 MM | - | - | - | 1 |
| F08138000 | SLEEVE HOSE DIAM. 25 | 36 MM | 28 MM | - | - | - | 1 |
| F17126000 | SLEEVE F 1" BSP / F 1" BSP (20 PCS) | F 1" BSP | F 1" BSP | - | - | - | 20 |

SLEEVE

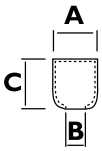


## COUPLINGS

| | | | | | | | |
|---|---|---|---|---|---|---|---|
| F07762000 | NIPPLE M 3/4" BSP / M 1" BSP | M 3/4"BSP | M 1" BSP | - | 34 | - | - |
| F08913000 | NIPPLE M 1" BSP - M 1/2" BSP | M 1" BSP | M 1" 1/2" BSP | - | 30 | - | - |
| F07765000 | NIPPLE M 1" BSP / M 1" BSP | M 1" BSP | M 1" BSP | - | 34 | - | - |
| F07766000 | NIPPLE M 3/4" BSP / M 3/4" BSP | M 3/4"BSP | M 3/4"BSP | - | 34 | - | - |

NIPPLE

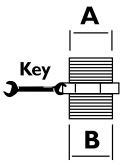

NIPPLE

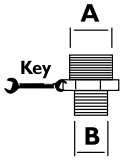


## FITTINGS

| | | | | | | | |
|---|---|---|---|---|---|---|---|
| F07441000 | FITTING M 3/4" BSP F 1/2" BSP | F 1/2"BSP | M 3/4"BSP | - | 27 | - | - |
| F07760000 | FITTING M 3/4" BSP / F 1" BSP | F 3/4"BSP | M 1" BSP | - | 34 | - | - |
| F07889000 | FITTING F 1" BSP / M 3/4" BSP | F 1" BSP | M 3/4"BSP | - | - | - | - |
| F1425800A | ADAPTER FOR TANK 2" X D.36 | F 2" BSP | D.36 | - | - | - | - |

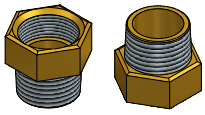

FITTINGS

## SWIVEL UNION

| | | | | | | | |
|---|---|---|---|---|---|---|---|
| 000890000 | SWIVEL UNION M 3/4" BSP X 27MM | 3/4" BSP | 19 MM | 27 MM | 38 MM | 38 MM | - |
| 000891000 | SWIVEL UNION M 1" BSP X 27MM | 1" | 19 MM | 27 MM | 31 MM | 31 MM | - |
| F00892000 | SWIVEL UNION M 1" BSP X 35MM | 1" | 25 MM | 35 MM | 38 MM | 38 MM | - |

UNION

1

2

3

4

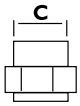


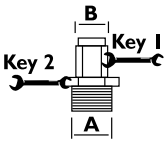

# FLANGED CONNECTIONS

## FEATURES

- STURDY DESIGN
- EASY TO FIT
- SEVERAL SHAPES

Safe and guaranteed solutions to connect products: connections, elbows, full kits and flanges.

## TECHNICAL DATA

| CODE | DESCRIPTION | INLET / OUTLET | | | | FLANGE | O-RING | OVAL RING | SCREW | | GRUB SCREW | NUT |
|---|---|---|---|---|---|---|---|---|---|---|---|---|
| | | A | B | C | H | N° | N° | N° | M8X20 N° | M8X30 N° | M8X50 N° | M8 N° |

## FLANGES

| | | | | | | | | | | | | |
|---|---|---|---|---|---|---|---|---|---|---|---|---|
| F0883200A | FLANGE D.80 1" E80/E120 | - | 1" BSP | 80 MM | 18 MM | - | - | - | - | - | - | - |
| F1290400A | KIT FLANGE 1" BSP | - | 1" BSP | 80 MM | 18 MM | 1 | - | 1 | - | 2 | - | 2 |
| F0918000A | KIT FLANGE 1" BSP (2 PCS) | - | 1" BSP | 80 MM | 18 MM | 2 | 2 | - | 4 | - | - | - |
| F1106200B | KIT FLANGE CUBE 70 | - | 1" BSP | 80 MM | 18 MM | 1 | 1 | - | 2 | - | - | - |
| R08417000 | KIT N°2 OR SEAL 3156 | - | - | - | - | - | 2 | - | - | - | - | - |
| F1444500A | KIT FLANGE 3/4" BSP (2 PCS) | - | 3/4" BSP | 80 MM | 18 MM | 2 | 2 | - | 4 | - | - | - |
| F0898500A | OR SEAL 3156 , OVAL SECTION | - | - | - | - | - | - | 1 | - | - | - | - |
| R0977900A | KIT FLANGE FOR PANTHER WITH K33 | - | - | - | - | 1 | 2 | - | - | - | 2 | 2 |
| F08043000 | SCREW M8X30 N°10 PIECES | - | - | - | - | - | - | - | - | 10 | - | - |
| F1290600A | FLANGED KIT WITH NUT | - | - | - | - | 1 | - | - | - | - | - | 2 |

FLANGE

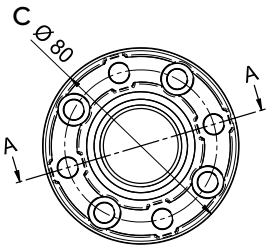

FLANGE KIT

ANY BIODIESEL | AIR | ANTIFREEZE | AdBlue® | BIODIESEL | DIESEL | FOOD | GASOLINE | GREASE | KEROSENE | OIL | WATER | WINDSCREEN

## TECHNICAL DATA

| CODE | DESCRIPTION | DIMENSIONS | FLANGE | O-RING | OVAL RING | SCREW | | | | GRUB SCREW | NUT |
|---|---|---|---|---|---|---|---|---|---|---|---|
| | | LENGTH | N° | N° | N° | M8X16 N° | M8X20 N° | M6X16 N° | M8X30 N° | M8X50 N° | M8 N° |

# FLANGED TUBE

| | | | | | | | | | | | |
|---|---|---|---|---|---|---|---|---|---|---|---|
| F1217200A | FLANGED TUBE 341MM§ | 341 | - | - | - | - | - | - | - | - | - |
| F1222800B | FLANGED TUBE 300MM | 300 | - | - | - | - | - | - | - | - | - |
| R13251000 | KIT TUBO RACC+FLANG. SELF.S. TANK FM+MC | 205 | - | 2 | - | 2 | 2 | - | - | - | - |

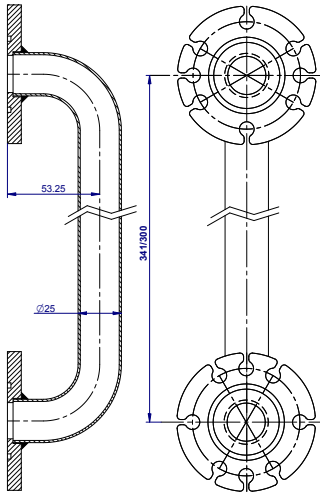

FLANGED TUBE 300/341

## TECHNICAL DATA

| CODE | DESCRIPTION | DIMENSIONS | FLANGE | O-RING | OVAL RING | SCREW | | | | GRUB SCREW | NUT |
|---|---|---|---|---|---|---|---|---|---|---|---|
| | | LENGTH | N° | N° | N° | M8X16 N° | M8X20 N° | M6X16 N° | M8X30 N° | M8X50 N° | M8 N° |

# FLANGED ELBOW

| | | | | | | | | | | | |
|---|---|---|---|---|---|---|---|---|---|---|---|
| F1082400A | KIT FLANGED ELBOW + OR + SCREW | - | - | 2 | - | - | 2 | - | 2 | - | 2 |

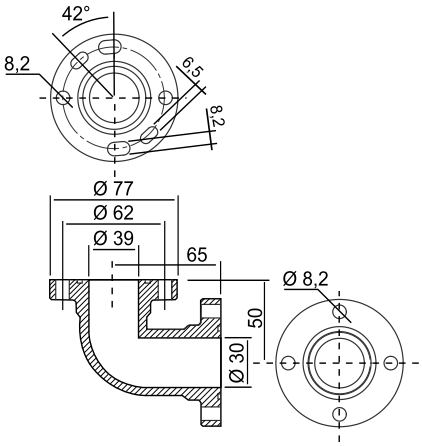

ELBOW

SCREW

NUT

FLANGE

O-RING

# HOSE & SWIVEL

Diesel fuel delivery hoses, suction hoses, crimped hoses, rotating hose connectors: a wide range to complete the accessories product range.

## TECHNICAL DATA

| CODE | DESCRIPTION | FLUIDS TYPE | PRESSURE | | VACUUM | DIMENSIONS | | | | KEY | CAMLOCK |
|---|---|---|---|---|---|---|---|---|---|---|---|
| | | | BAR | PSI | BAR | A MM | B MM | S MM | L M/FT. | | MALE/FEMALE BSP |
| **DELIVERY HOSES** | | | | | | | | | | | |
| F0060500A | DIESEL HOSE D.20 80MT | D | 10 | - | - | 20 | 27 | - | 80 | - | - |
| F0060502A | DIESEL HOSE Ø20 PARKER 80 MT | D | 10 | - | - | 20 | 27 | - | 80 | - | - |
| F0060600A | DIESEL HOSE D.25 40MT | D | 10 | - | - | 25 | 35 | - | 40 | - | - |
| F0060602A | DIESEL HOSE Ø25 PARKER 40MT | D | 10 | - | - | 25 | 35 | - | 40 | - | - |
| F23554000 | HOSE B100 D.20 60M | D B | 12 | - | - | - | - | 20 | 60 | - | - |
| F23555000 | HOSE B100 D.25 60M | D B | 12 | - | - | - | - | 25 | 60 | - | - |
| **DELIVERY CRIMPED HOSES** | | | | | | | | | | | |
| F11885000 | DIESEL HOSE Ø20 L=4M CRIMPED 3/4"X3/4" | D | 10 | - | - | 3/4" BSP | 3/4" BSP | 20 | 4 | - | - |
| F08561000 | DIESEL HOSE Ø20 L=4M CRIMPED 3/4"X1" | D | 10 | - | - | 3/4" BSP | 1" BSP | 20 | 4 | - | - |
| F08976000 | DIESEL HOSE Ø20 L=4M CRIMPED 1"X1" | D | 10 | - | - | 1" BSP | 1" BSP | 20 | 4 | - | - |
| F12876000 | DIESEL HOSE Ø20 L=6M CRIMPED 3/4"X3/4" | D | 10 | - | - | 3/4" BSP | 3/4" BSP | 20 | 6 | - | - |
| F11063000 | DIESEL HOSE Ø20 L=6M CRIMPED 3/4"X1" | D | 10 | - | - | 3/4" BSP | 1" BSP | 20 | 6 | - | - |
| F08945000 | DIESEL HOSE Ø20 L=6M CRIMPED 1"X1" | D | 10 | - | - | 1" BSP | 1" BSP | 20 | 6 | - | - |
| F11060000 | DIESEL HOSE Ø20 L=7M CRIMPED 1"X1" | D | 10 | - | - | 1" BSP | 1" BSP | 20 | 7 | - | - |
| F12323000 | DIESEL HOSE Ø20 L=8M CRIMPED 1"X1" | D | 10 | - | - | 1" BSP | 1" BSP | 20 | 8 | - | - |
| F11532000 | DIESEL HOSE Ø20 L=10M CRIMPED 3/4"X1" | D | 10 | - | - | 3/4" BSP | 1" BSP | 20 | 10 | - | - |
| F12929000 | DIESEL HOSE Ø20 L=10M CRIMPED 1"X1"PARKE | D | 10 | - | - | 1" BSP | 1" BSP | 20 | 10 | - | - |
| F16367000 | DIESEL HOSE D.25 CRIMPED 1"/1" 1MT | D | 10 | - | - | 1" BSP | 1" BSP | 25 | 1 | - | - |
| F1815100A | GASOLINE HOSE D.20 CRIMPED 1"/1" 4MT | D | 10 | - | - | 1" BSP | 1" BSP | 20 | 4 | - | - |
| F08976040 | PARKER HOSE D20 CRIMPED 3/4" X 1" 2 MT | D | 10 | - | - | 3/4" BSP | 1" BSP | 20 | 2 | - | - |
| F17254000 | PARKER HOSE D20 CRIMPED 1" BSP 10 MT | D | 10 | - | - | - | 1" BSP | 20 | 10 | - | - |
| F12794000 | DIESEL HOSE Ø25 L=2M CRIMPED 1"X1" | D | 10 | - | - | 1" BSP | 1" BSP | 25 | 2 | - | - |
| F08560000 | DIESEL HOSE Ø25 L=3M 1"X1" | D | 10 | - | - | 1" BSP | 1" BSP | 25 | 3 | - | - |
| F08977000 | DIESEL HOSE Ø25 L=4M CRIMPED 1"X1" | D | 10 | - | - | 1" BSP | 1" BSP | 25 | 4 | - | - |
| F11264000 | DIESEL HOSE Ø25 L=5M CRIMPED 1"X1" | D | 10 | - | - | 1" BSP | 1" BSP | 25 | 5 | - | - |
| F08858000 | DIESEL HOSE Ø25 L=6M CRIMPED 1"X1" | D | 10 | - | - | 1" BSP | 1" BSP | 25 | 6 | - | - |
| F12784000 | DIESEL HOSE Ø25 L=7M CRIMPED 1"X1" | D | 10 | - | - | 1" BSP | 1" BSP | 25 | 7 | - | - |
| F11540000 | DIESEL HOSE Ø25 L=8M CRIMPED 1"X1" | D | 10 | - | - | 1" BSP | 1" BSP | 25 | 8 | - | - |
| F12785000 | DIESEL HOSE Ø25 L=10M CRIMPED 1"X1" | D | 10 | - | - | 1" BSP | 1" BSP | 25 | 10 | - | - |
| F14412000 | DIESEL HOSE Ø25 L=12M CRIMPED 1"X1" | D | 10 | - | - | 1" BSP | 1" BSP | 25 | 12 | - | - |
| F23556000 | HOSE B100 D.20 L=6M 1"X1" | D B | 12 | - | - | 1" BSP | 1" BSP | 20 | 6 | - | - |
| F23607000 | HOSE B100 D.25 L=6M 1"X1" | D B | 12 | - | - | 1" BSP | 1" BSP | 25 | 6 | - | - |

DISPENSING HOSES

RUBBER HOSE

RUBBER SUCTION HOSE

PVC HOSE

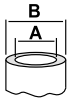

CRIMPED HOSE

## BENDING PROTECTION

| | |
|---|---|
| F20889000 | BENDING PROTECTION 1" |
| F18568000 | PROTEZIONE PIEGATURA TUBO 3/4" |

ANY BIODIESEL | AIR | ANTIFREEZE | AdBlue® | BIODIESEL | DIESEL | FOOD | GASOLINE | GREASE | KEROSENE | OIL | WATER | WINDSCREEN

## TECHNICAL DATA

| CODE | DESCRIPTION | FLUIDS TYPE | PRESSURE | | VACUUM | DIMENSIONS | | | | KEY | CAMLOCK |
|---|---|---|---|---|---|---|---|---|---|---|---|
| | | | BAR | PSI | BAR | A MM | B MM | S MM | L M/FT. | | MALE/FEMALE BSP |

## SUCTION HOSES

| | | | | | | | | | | | |
|---|---|---|---|---|---|---|---|---|---|---|---|
| F12120010 | SUCTION SPIRAL HOSE D.25 60MT | D B O | 10 | - | -0,9 | 25 | 35 | - | 60 | - | - |
| F1113100B | SUCTION SPIRAL PVC HOSE D.25 60MT | D O | 10 | - | -0,9 | 25 | 33 | - | 60 | - | - |

## SUCTION CRIMPED SPIRAL HOSES

| | | | | | | | | | | | |
|---|---|---|---|---|---|---|---|---|---|---|---|
| F12117000 | SUCTION SPIRAL HOSE D.25 CRIMP 1"/1" 1MT | D B O | 10 | - | - 0,9 | 1" BSP | 1" BSP | 25 | 1 | - | - |
| F12118000 | SUCT SPIRAL HOSE D.25 CRIMP 1"/1" 1.5MT | D B O | 10 | - | - 0,9 | 1" BSP | 1" BSP | 25 | 1,5 | - | - |
| F12119000 | SUCTION SPIRAL HOSE D.25 CRIMP 1"/1" 2MT | D B O | 10 | - | - 0,9 | 1" BSP | 1" BSP | 25 | 2 | - | - |
| F13768000 | SUCT SPIRAL HOSE D.25 CRIMP 1"/1" 3.5MT | D B O | 10 | - | - 0,9 | 1" BSP | 1" BSP | 25 | 3,5 | - | - |
| F13695000 | SUCTION SPIRAL HOSE D.25 CRIMP 1"/1" 5MT | D B O | 10 | - | - 0,9 | 1" BSP | 1" BSP | 25 | 5 | - | - |
| F1640400A | KIT SUCT SPIRAL HOSE D.25 W/VALVE 4MT | D B O | 10 | - | - 0,9 | 1" BSP | 1" BSP | 25 | 4 | - | - |

## SUCTION CRIMPED PVC SPIRAL HOSES

| | | | | | | | | | | | |
|---|---|---|---|---|---|---|---|---|---|---|---|
| F1113200A | TRAS. PVC HOSE Ø25 L=1.6M CRIMPED 1"X1" | D O | 5 | - | - 0,9 | 1" BSP | 1" BSP | 25 | 1,6 | - | - |
| F11637000 | TRAS. PVC HOSE Ø25 L=3M CRIMPED 1" X1" | D O | 5 | - | - 0,8 | 1" BSP | 1" BSP | 25 | 3 | - | - |
| F11213010 | TRAS. PVC HOSE Ø25 L=1,9M 1"X1" + FV | D O | 5 | - | - 0,8 | 1" BSP | 1" BSP | 25 | 1,9 | - | - |
| F11638010 | TRAS. PVC HOSE Ø25 L=4M 1"X1" + FV | D O | 5 | - | - 0,9 | 1" BSP | 1" BSP | 25 | 4 | - | - |

RUBBER HOSE

SPIRAL RUBBER HOSE

SPIRAL PVC HOSE

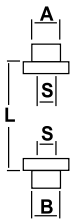


## HOSE KIT 1" 1/2

| | | | | | | | | | | | |
|---|---|---|---|---|---|---|---|---|---|---|---|
| F18798000 | KIT HOSE 1 1/2" 10 MT+CAMLOCK+HOSETAIL | D | 10 | 145 | - | 1" 1/2 BSP | - | - | - | - | 1" 1/2 BSP |
| F18799000 | KIT HOSE 1 1/2" 20 MT+CAMLOCK+HOSETAIL | D | 20 | 65,6 | - | 1" 1/2 BSP | - | - | - | - | 1" 1/2 BSP |
| F14390010 | KIT 1" BSP MF CAMLOCK | D | - | - | - | 1"BSP | - | - | - | - | 1" BSP |

HOSE KIT 1" 1/2

CAMLOCK

## SWIVEL

| | | | | | | | | | | | |
|---|---|---|---|---|---|---|---|---|---|---|---|
| 000623000 | SWIVEL M ·" BSP / M 1" BSP | - | - | - | - | M 3/4"BSP | M 1" BSP | - | - | 94 | - |
| 00062400A | SWIVEL M ·" BSP / F ·" BSP | - | - | - | - | M 3/4" BSP | F 3/4"BSP | - | - | 38 | - |
| F0062000A | SWIVEL M ·" BSP / F 1" BSP | - | - | - | - | M 3/4" BSP | F 1" BSP | - | - | 34 | - |
| F0062200A | SWIVEL M 1" BSP / F 1" BSP | - | - | - | - | M 1" BSP | F 1" BSP | - | - | 34 | - |
| F00623100 | SWIVEL M ·" BSP / M 1" BSP W/FILTER | - | - | - | - | M 3/4" BSP | M 1" BSP | - | - | 94 | - |
| F0062500A | SWIVEL M ·" BSP X 20MM | - | - | - | - | M 3/4" BSP | 20MM | - | - | 38 | - |
| F0845600A | SWIVEL M 1/2" BSP F 1/2" BSP | - | - | - | - | M 1/2" BSP | F 1/2" BSP | - | - | 25 | - |

SWIVEL

ROTATING HOSE CONNECTORS

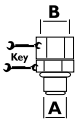

# ACCESSORIES

## ACCESS CONTROL

| ACCESS 85 | CODE | DESCRIPTION |
|---|---|---|
| | F1249600A | MANAGER KEY 2018 |
| | F1590400A | KIT DRIVER KEY YELLOW (10PCS) |
| | F1623900B | NOZZLE HOLDER SS+CABLED SWITCH FM/MC |
| | F17121000 | LEVEL PROBE FOR ACCESS 85 |

F1590400A

F1623900B

F1249600A

F17121000

ACCESS 85

# MERCHANDISE

# MERCHANDISE

## PACKAGING

| CODE | DESCRIPTION | WEIGHT | | PACKAGING | | | |
|---|---|---|---|---|---|---|---|
| | | KG | LBS | MM | INCH | PCS/PALLET | PCS/BOX |
| ***T-SHIRT WHITE*** | | | | | | | |
| **PBG000026** | PIUSI T-SHIRT WHITE BOX 10 PCS - L | 1 | - | 35X26X18 | - | - | 10 |
| **PBG000027** | PIUSI T-SHIRT WHITE BOX 10 PCS - XL | 1 | - | 35X26X18 | - | - | 10 |
| **PBG000029** | PIUSI T-SHIRT WHITE BOX 10 PCS - M | 1 | - | 35X26X18 | - | - | 10 |
| ***UMBRELLA*** | | | | | | | |
| **PBG000030** | PIUSI UMBRELLA - BOX 10 PCS | 5,5 | - | 35X26X18 | - | - | 10 |
| ***BAG*** | | | | | | | |
| **PBG000035** | PIUSI BAG 2018 - BOX 150 PCS | 18,5 | - | - | - | - | 150 |
| ***KEYRING*** | | | | | | | |
| **PBG000041** | PIUSI KEYRING -BOX 100 PCS | - | - | - | - | - | 100 |

## PACKAGING

| CODE | DESCRIPTION | WEIGHT | | PACKAGING | | | |
|---|---|---|---|---|---|---|---|
| | | KG | LBS | MM | INCH | PCS/PALLET | PCS/BOX |
| ***METALLIC FLOOR STAND*** | | | | | | | |
| **PBA000013** | PIUSI METALLIC FLOOR STAND | 76 | - | 120X100 (PALLET) | - | 1 | - |
| ***PIUSI FLAG*** | | | | | | | |
| **PBA000030** | DROP DISPLAY PIUSI - ADV | 8 | - | | | | 1 |

# PIUSI FLUIDS' INFORMATION

## ATEX/IECEX DIRECTIVE

### SAFETY IN EXPLOSIVE ENVIRONMENTS

As of 1st July 2003, the ATEX directive came into force throughout the EEC. This directive became an obligatory requirement for all electrical and mechanical equipment intended for use in dangerous areas. Potentially explosive atmospheres exist where there is a risk of explosion due to mixtures of gas and air, steam and air, dust and air or other flammable combinations typical of petrol vapours.
If the electrical or mechanical material must be used in areas where there is an explosive atmosphere, it must be designed and built so as not to create/ to eliminate sources of ignition such as sparks, hot surfaces or static electricity and all sources of combustion able to ignite these mixtures. Risk areas for environments where gas and flammable vapours are present can range from AREA O (constant risk of explosion) to AREA 1 (risk of explosion probable) and AREA 2 (low risk and any risk of explosion persists for a short time only).

Atex

II 2 G

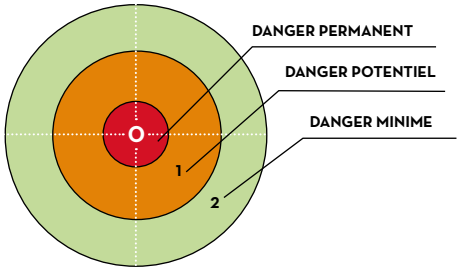


OUR PUMPS COMPLIES WITH THE FOLLOWING MARKING ATEX/IECEx

| II | 2 | G | Ex | d | IIA | T4 | Gb |
|---|---|---|---|---|---|---|---|
| GROUP | CATEGORY | TYPE OF EXPLOSIVE ATMOSPHERE | PERMANENT PREFIX | PROTECTION METHOD | GAS GLASS | TEMPERATURE CLASS | EQUIPMENT PROTECTION LEVEL |

**II** = Group II comprises appliances intended for use in other environments (other than mining) in which explosive atmospheres are probable.
**2** = High protection, Category 2 for AREA 1 GAS and AREA 2 GAS
**G** = Gas
**Ex** = Explosion-proof equipment certified according to the European ATEX directives
**d** = Explosion-proof cases (EN 60079-1)
**IIA** = Electrical appliances for potentially explosive environments other than mining. (Propane, Butane etc.)
**T4** = The temperature of the pump will not exceed 135°C

PIUSI 's experience in the world of flammable liquids

PIUSI renews his natural propension to find solutions for the transfer of fluids, expanding its range with new products to dispensing flammable liquids.

Experience gained with pumps for transferring diesel fuel, combined with the growing demands of the market, have fostered the development of this new range of pumps for gasoline, kerosene and diesel, that satisfy the criteria of strict ATEX directives concerning the use of materials in potentially explosive atmospheres.

The PIUSI products have successfully obtained certification CESI and IECEx Certificate of Conformity.

## TYPE OF FLUIDS

| | |
|---|---|
| AIR | A |
| ANTIFREEZE | A |
| AdBlue® (UREA) | Ad |
| BIODIESEL | B |
| DIESEL | D |
| FOOD | F |
| GASOLINE | G |
| GREASE | RG |
| KEROSENE | K |
| OIL | O |
| WATER | W |
| WINDSCREEN | WS |

The intellectual property of this catalogue is assigned to all countries. Translation, reproduction, electronic storage and full or partial adaption by any means (including micofilms and photocopies) of its contents, without prior written authorisation from PIUSI S.p.a., entails a violation of PIUSI S.P.A's copyrights and constitutes an act of unfair competition. The products shown in the images of this catalogue are protected according to the regulation in force regarding industrial property. The information contained in this catalogue is as accurate as possible and complies, as far as possible, with existing regulations at the time of its publication. We therefore reserve the right to make subsequent modifications in line with modifications to regulations and/ or in relation to any production requirements that are deemed necessary for safety reasons. The technical specifications indicated in this catalogue cancel out and replace those already present in the previous general catalogue and in the product catalogues. The updates and product data sheets are available in PDF format on our website:
www.piusi.com

Since 1953, piusi has been employing italian engineering skills at the service of its customers, with professionalism and integrity in order to build stable and lasting relationships.

Our mission is to provide simple, intelligent and professional solutions for the transfer, dispense and measurement of lubricants, fuels and liquids, with the highest consideration for human and environmental health.

**PIUSI S.p.A.**
Headquarters
46029 Suzzara (Mantova) Italy
tel.+39 0376 534561
e-mail: piusi@piusi.com
**www.piusi.com**

**PIUSI USA, Inc.**
3901 Anglers Avenue Fort Lauderdale, FL 33312
tel.: 954 584 1552
e-mail: piusiusa@piusi.com
**www.piusi.com**

*TECHNICAL DATA IN THE CATALOGUE ARE NOT BINDING. THE COMPANY RESERVES THE RIGHT TO MODIFY THE INFORMATION CONTAINED IN THIS CATALOGUE WITHOUT ANY PRIOR NOTICE. Copyright PIUSI s.p.a. - Catalogue CO375B EN -09.24 REV.02 del 04.2025*